THIS COPY IS PROVIDED ON A RESTRICTED BASIS AND IS NOT TO BE USED IN ANY WAY DETRIMENTAL TO THE INTERESTS OF PANDUIT CORP.

A

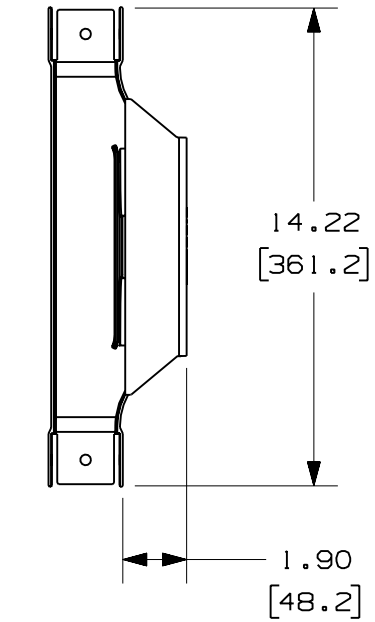

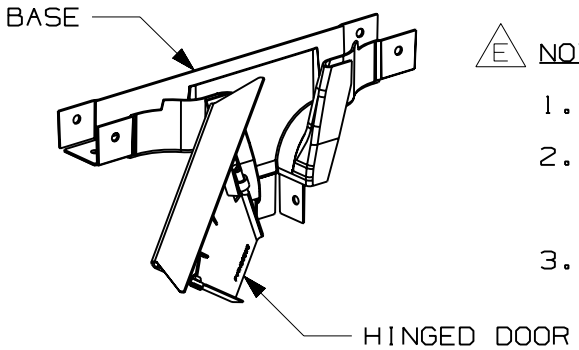

PANDUIT PART NUMBER	WEIGHT
FVTHD2X2	0.55 LB/EACH (251g/EACH)

D

E NOTES:

1. SEE CURRENT CATALOG FOR ADDITIONAL PART SUFFIXES TO INDICATE COLOR AND/OR PACKAGE QUANTITY.
2. THE FIBER-DUCT 2x2 AND FIBERRUNNER 2x2 VERTICAL TEE FITTING INCLUDES:
   ONE (1) VERTICAL TEE BASE,
   ONE (1) HINGED DOOR
3. DIMENSIONS IN PARENTHESES ARE IN METRIC.

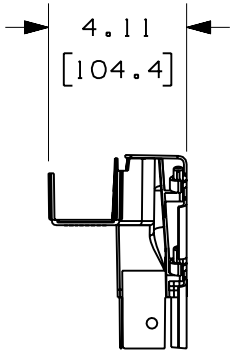

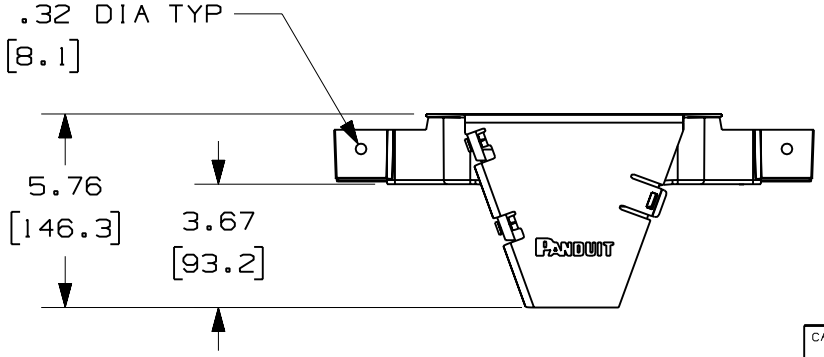

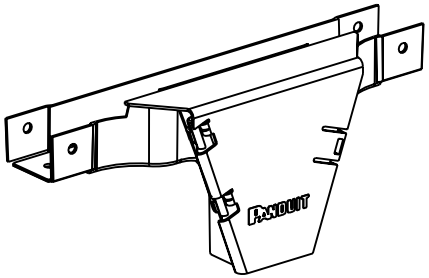

ENG. REF.: D38239BD_DC_FVTHD2X2_01.prt

CAD FILENAME/LAYERS C FVTHD2X2.pdf

PANDUIT CORP TINLEY PARK, ILLINOIS

FIBER-DUCT 2x2 AND FIBERRUNNER 2x2 VERTICAL TEE FITTING (FVTHD2X2)

B CUSTOMER DRAWING

UNLESS OTHERWISE SPECIFIED, DIMENSIONAL TOLERANCES ARE:
(.X) ± (.XXX) ±
(.XX) ±.03 (.8) ANGLES ±

UNLESS OTHERWISE SPECIFIED, ALL DIMENSIONS ARE GIVEN IN INCHES, THIRD ANGLE PROJECTION.

REV	DATE	BY	CHK	DESCRIPTION	ECN	-	R	CUST	SUP	GMBH
-	-------	---	--	E. REVISED GENERAL NOTES	--------		--	--		
-	-------	---	--	D. REVISED PART WEIGHT C. REVISED CAD FILENAME	--------		--	--		
1	7-25-06	DTP	RN	B. REVISED DRAWING TITLE A. REVISED AND REDRAWN	38239-04		RN	RN		

DRAWN BY: JHNU
DATE: 2-21-02
CHK'D: CEO
MAT'L: ABS
SCALE: NONE
DRAWING NO.: 38239-04
DWG SIZE: A