DATA SHEET

SKY85601-11: 4.9 to 5.9 GHz SPDT Switch with Low-Noise Amplifier

Applications

- 802.11 a/n WLANs
- 5 GHz ISM radios
- Smartphones
- Notebooks, netbooks, and tablets
- Routers, access points, and gateways
- Wireless video systems

Features

- Low noise figure: 2.5 dB
- Frequency range: 4.9 to 5.9 GHz
- High IIP3: +6 dBm
- High gain: 12 dB
- Bypass mode with –5 dB insertion loss
- High transmit to receive isolation for high-power applications
- Small QFN (16-pin, 2.5 x 2.5 mm) package (MSL1, 260 °C per JEDEC J-STD-020)

Skyworks Green™ products are compliant with all applicable legislation and are halogen-free. For additional information, refer to *Skyworks Definition of Green™*, document number SQ04–0074.

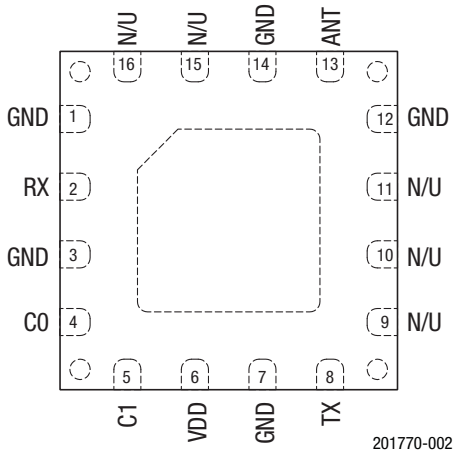

Figure 2. SKY85601-11 Pinout (Top View)

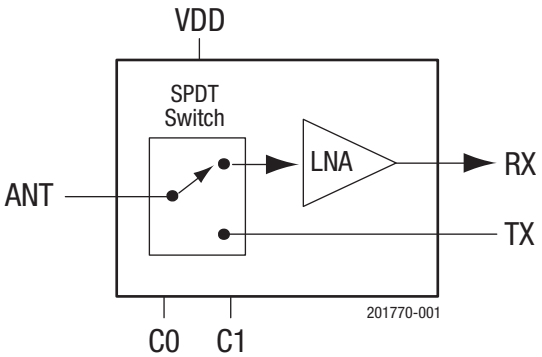

Figure 1. SKY85601-11 Block Diagram

Description

The SKY85601-11 is an integrated, single-pole double-throw (SPDT) switch with a low-noise amplifier (LNA) intended for wireless applications. The device has a low noise figure (NF) with high linearity in the transmit mode.

The SKY85601-11 operates at 3.3 V and draws 15 mA of current. In the transmit mode, a shutdown function saves power when the device is inactive. The switch requires five external components.

The switch is manufactured in a compact, 2.5 x 2.5 mm, 16-pin Quad Flat No-Lead (QFN) package. The small footprint provides the industry's smallest PCB area needed to implement an integrated broadband SPDT switch with LNA functionality.

A functional block diagram is shown in Figure 1. The pin configuration and package are shown in Figure 2. Signal pin assignments and functional pin descriptions are provided in Table 1.

Table 1. SKY85601-11 Signal Descriptions

Pin	Name	Description	Pin	Name	Description
1	GND	Ground	9	N/U	Not used (open circuit)
2	RX	5 GHz LNA output signal	10	N/U	Not used (open circuit)
3	GND	Ground	11	N/U	Not used (open circuit)
4	C0	Switch control logic 1	12	GND	Ground
5	C1	Switch control logic 2	13	ANT	5 GHz antenna output
6	VDD	LNA supply voltage	14	GND	Ground
7	GND	Ground	15	N/U	Not used (open circuit)
8	TX	5 GHz transmit input signal	16	N/U	Not used (open circuit)

Electrical and Mechanical Specifications

The absolute maximum ratings of the SKY85601-11 are provided in Table 2. The recommended operating conditions are specified in Table 3 and electrical specifications are provided in Tables 4, 5, and 6.

Typical performance characteristics of the SKY85601-11 are illustrated in Figures 3 through 8.

Control logic for the SKY85601-11 SPDT switch is provided in Table 7.

Table 2. SKY85601-11 Absolute Maximum Ratings[1]

Parameter	Symbol	Minimum	Maximum	Units
Supply voltage	V_{DD}	3.0	3.6	V
LNA power (receive mode)	P_{RX}		+3	dBm
Transmit input power (ANT terminated in 50 Ω match, OFDM signal modulated at MCS9 or less)	P_{TXIN}		+30	dBm
Switch logic control	C0, C1	0	3.6	V
Storage temperature	T_{STG}	–40	+125	°C

1 Exposure to maximum rating conditions for extended periods may reduce device reliability. There is no damage to device with only one parameter set at the limit and all other parameters set at or below their nominal value. Exceeding any of the limits listed here may result in permanent damage to the device.

***ESD HANDLING**: Although this device is designed to be as robust as possible, electrostatic discharge (ESD) can damage this device. This device must be protected at all times from ESD when handling or transporting. Static charges may easily produce potentials of several kilovolts on the human body or equipment, which can discharge without detection. Industry-standard ESD handling precautions should be used at all times.*

Table 3. SKY85601-11 Recommended Operating Conditions

Parameter	Symbol	Min	Typ	Max	Units
Supply voltage: LNA, bias, and driver stage	V_{DD}	3.0		3.6	V
Operating temperature	T_A	–40	+25	+85	°C

Table 4. SKY85601-11 Electrical Specifications: Control Logic Characteristics[1]
(VDD = 3.3 V, T_A = +25 °C, Unless Otherwise Noted)

Parameter	Symbol	Test Condition	Min	Typ	Max	Units
Supply current, receive mode	$I_{CC_802.11A}$	C0 = 0 V, C1 = 3.3 V		15		mA
		C0 = C1 = 0 V		0.02		mA
Supply current, off	I_{OFF}	No RF, C0 = C1 = 0 V, measured on VDD pin		20	70	µA
Control voltage:						
High	V_{IH}		1.6		3.6	V
Low	V_{IL}		–0.3		+0.3	V
Control line current:						
High	I_{CC_H}			2	10	µA
Low	I_{CC_L}				1	µA

1 Performance is guaranteed only under the conditions listed in this table.

Table 5. SKY85601-11 Electrical Specifications: Receive AC Characteristics[1]
(C1 = 3.3 V, C0 = 0 V, T_A = +25 °C, All Unused Ports Terminated with 50 Ω, Unless Otherwise Noted)

Parameter	Symbol	Test Condition	Min	Typ	Max	Units
Frequency	f		4.90		5.85	GHz
Insertion loss	IL	Bypass mode: C0 = C1 = 0 V		–5		dB
Receive gain		High gain mode:				
		4.90 GHz to 5.20 GHz	11.0	13.0		dB
		5.20 GHz to 5.85 GHz	11.5	13.5		dB
Noise figure	NF	High gain mode		2.5		dB
TX to RX port isolation	Iso	C0 = 3.3 V, C1 = 0 V		50		dB
Input return loss[2]	S11	@ ANT port		10		dB
Output return loss[2]	S22	@ RX output		8		dB
1 dB Input compression point	IP1dB	@ ANT port, high gain mode		–5		dBm
		LNA bypass mode		+10		dBm
Interferer amplitude (maximum 2.4 GHz)		1 dB degradation of IP1dB			0	dBm
Transmit/receive switching speed	t_{ON}, t_{OFF}	C0 and C1 (50%) to RF output (10% or 90%)		300		ns

1 Performance is guaranteed only under the conditions listed in this table.
2 Refer to Figures 5 and 6.

Table 6. SKY85601-11 Electrical Specifications: Transmit AC Characteristics[1]
(C0 = 3.3 V, C1 = 0 V, T_A = +25 °C, All Unused Ports Terminated with 50 Ω, Unless Otherwise Noted)

Parameter	Symbol	Test Condition	Min	Typ	Max	Units
Frequency	f		4.90		5.85	GHz
Insertion loss	IL			–0.75		dB
Input return loss	S11	@ TX input port		–15		dB
Output return loss	S22	@ ANT port		–15		dB
Maximum input power	Pin	Harmonic contribution from switch or LNA < –50 dBm/MHz OFDM, MCS9 or better			+30	dBm

1 Performance is guaranteed only under the conditions listed in this table.

Typical Performance Characteristics

(VDD = 3.3 V, TA = +25 °C, Unless Otherwise Noted)

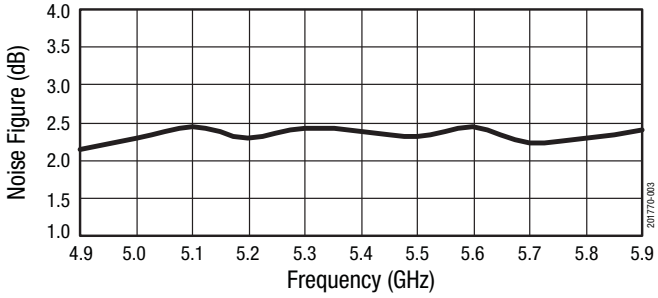

Figure 3. Noise Figure vs Frequency

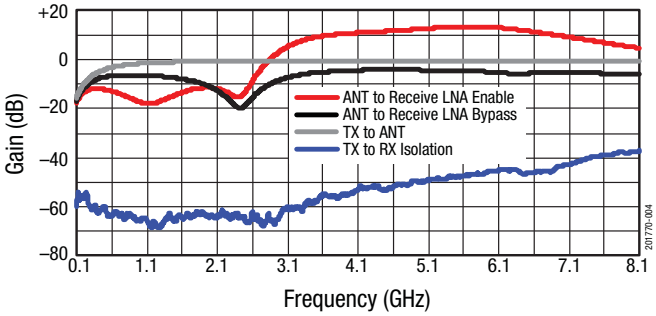

Figure 4. Small Signal Gain vs Frequency

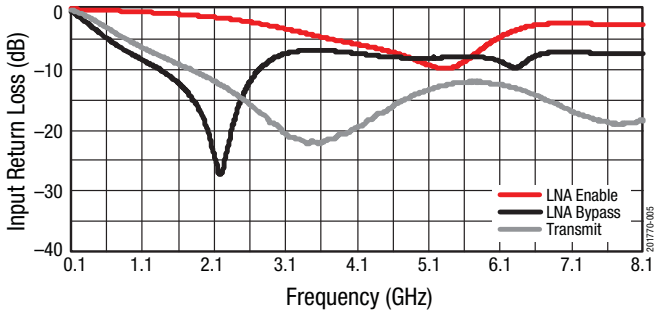

Figure 5. Input Return Loss vs Frequency

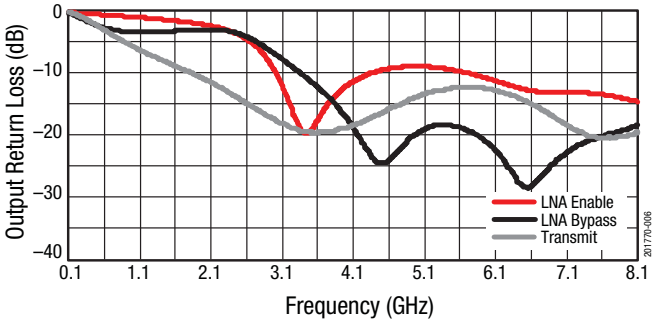

Figure 6. Output Return Loss vs Frequency

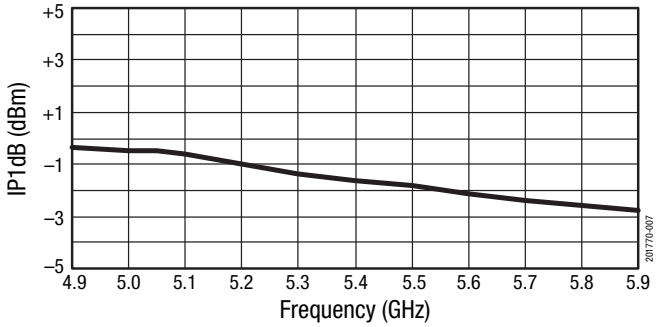

Figure 7. IP1dB vs Frequency

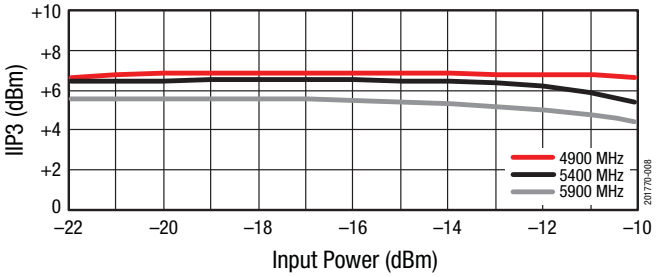

Figure 8. IIP3 vs Input Power

Table 7. SKY85601-11 Switch Control Logic

ANT	C0	C1
Receive bypass	Off	Off
Receive LNA on	Off	On
Transmit on	On	Off
All off	On	On

Note: "Off" = 0 V. "On" = +3.3 V.

Evaluation Board Description

The SKY85601-11 Evaluation Board is used to test the performance of the SKY85601-11 SPDT Switch. An Evaluation Board schematic diagram is provided in Figure 9. Table 8 provides the Bill of Materials (BOM) for Evaluation Board components. A photograph of the Evaluation Board is shown in Figure 10.

Evaluation Board Setup Procedure

1. Connect system ground to pin 2 of connector J5.
2. Apply 3.3 V to pin 9 of connector J5.
3. Test the RF paths as described by the control logic in Table 7.

RF Port Configuration

The ANT and TX ports are DC-blocked and do not require DC blocking capacitors.

There is no DC present on the RX port. This pin needs to be DC blocked with a general purpose 4.7 pF capacitor if there is > 2.5 V DC on the trace connecting to the RX port.

Evaluation Board Losses

The board losses from the RF connectors of the Evaluation Board to the pins of the SKY85601-11 are shown below.

Signal	Loss (dB)		
	4.9 GHz	5.4 GHz	5.9 GHz
TX	0.28	0.25	0.37
RX	0.15	0.19	0.20
ANT	0.15	0.19	0.20

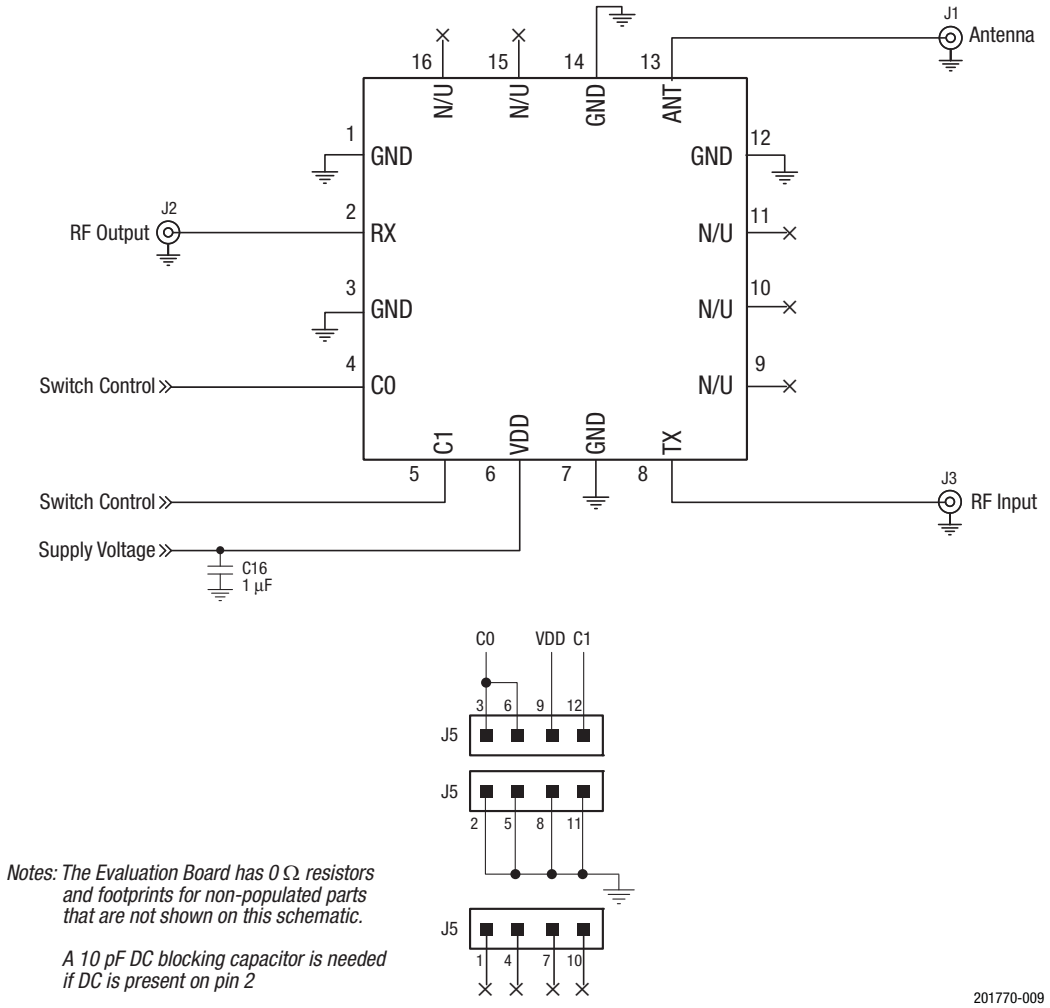

Notes: The Evaluation Board has 0 Ω resistors and footprints for non-populated parts that are not shown on this schematic.

A 10 pF DC blocking capacitor is needed if DC is present on pin 2

Figure 9. SKY85601-11 Evaluation Board Schematic

Table 8. SKY85601-11 Evaluation Board Bill of Materials

Component	Value	Size	Vendor	Part Number	Description
C8	0 Ω	0402	Panasonic	ERJ2GEJ0R0	Thick film chip resistor
C16	1 µF	0402	Murata	GRM155R60J105KE19	Multilayer ceramic
J1, J2, J3	SMA	End launch	Johnson Components	142-0701-851	SMA end launch straight jack receptacle
J5	4x3	100 mil	Samtec	TSW-104-07-G-T	100 mil header

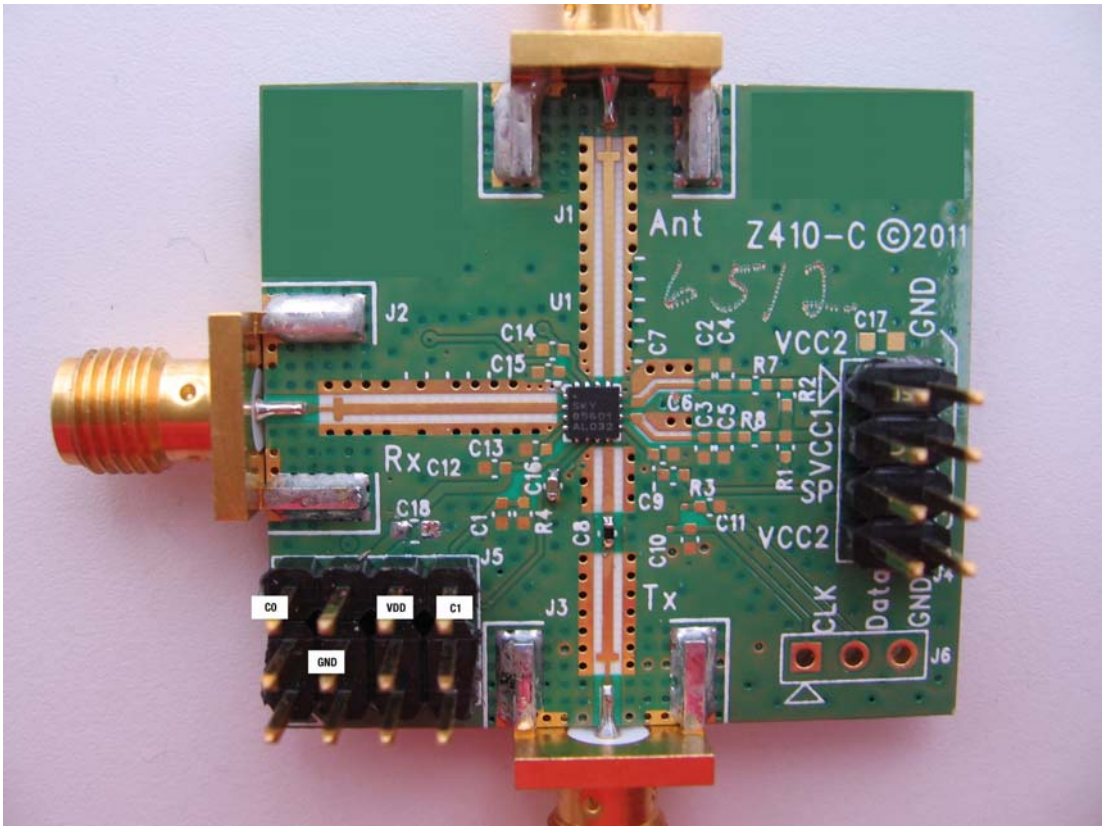

Figure 10. SKY85601-11 Evaluation Board

Package Dimensions

The PCB layout footprint for the SKY85601-11 is provided in Figure 11. Typical part markings are shown in Figure 12. Package dimensions are shown in Figure 13, and tape and reel dimensions are provided in Figure 14.

Package and Handling Information

Instructions on the shipping container label regarding exposure to moisture after the container seal is broken must be followed. Otherwise, problems related to moisture absorption may occur when the part is subjected to high temperature during solder assembly.

The SKY85601-11 is rated to Moisture Sensitivity Level 1 (MSL1) at 260 °C. It can be used for lead or lead-free soldering. For additional information, refer to the Skyworks Application Note, *Solder Reflow Information*, document number 200164.

Care must be taken when attaching this product, whether it is done manually or in a production solder reflow environment. Production quantities of this product are shipped in a standard tape and reel format.

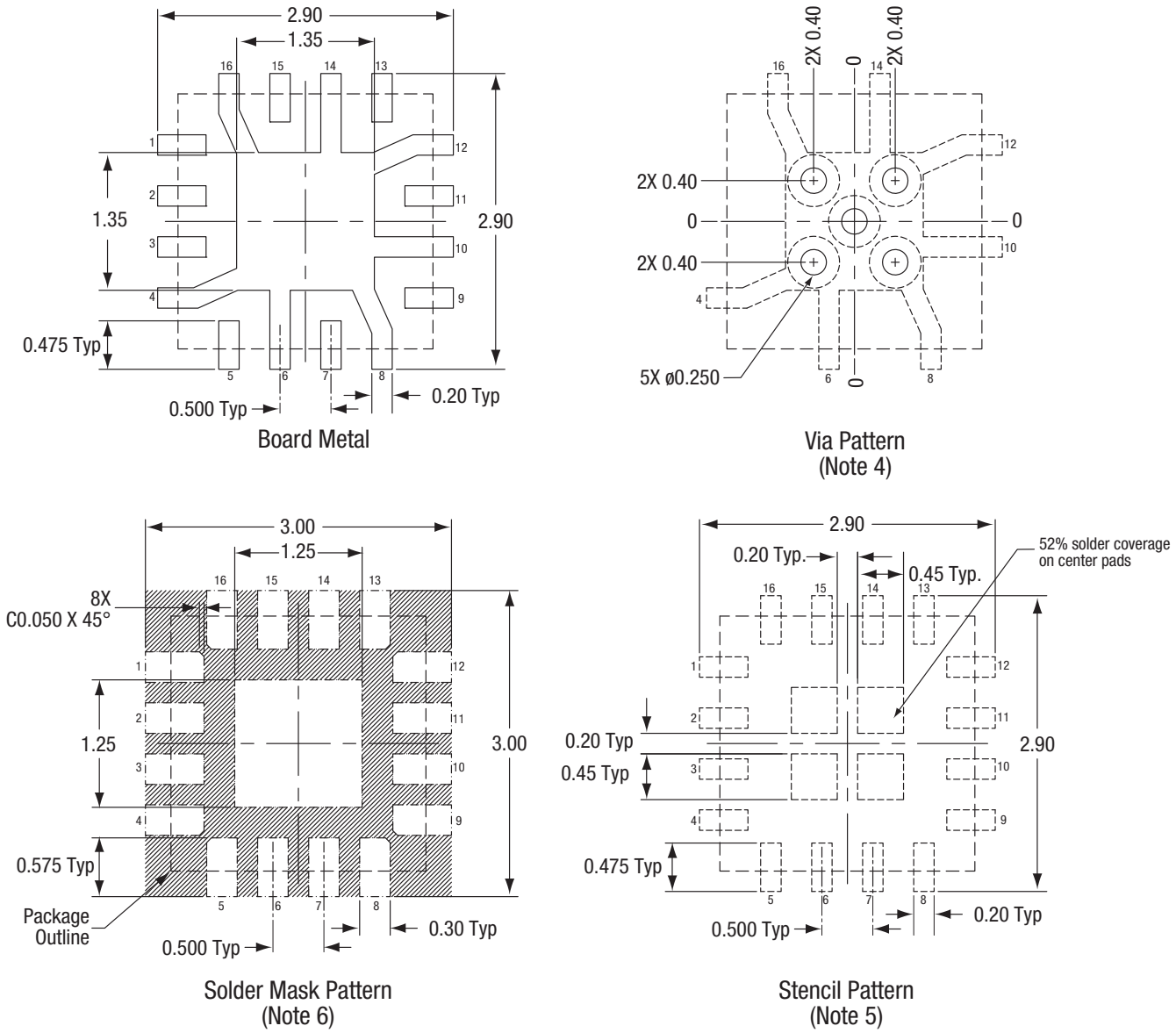

Notes:

1. *All dimensions are in millimeters*
2. *Dimensions and tolerances according to ASME Y14.5M-1994*
3. *Unless specified, dimensions are symmetrical about center lines.*
4. *Via hole recommendations: 0.025 mm Cu via wall plating (minimum), solder mask on the far side should tent or plug via holes.*
5. *Stencil recommendations: 0.10 mm stencil thickness, laser cut apertures, trapezoidal walls and rounded corners offer better paste release.*
6. *Solder mask recommendations: contact board fabricator for recommended solder mask offset and tolerance.*

201770-011

Figure 11. SKY85601-11 PCB Layout Footprint

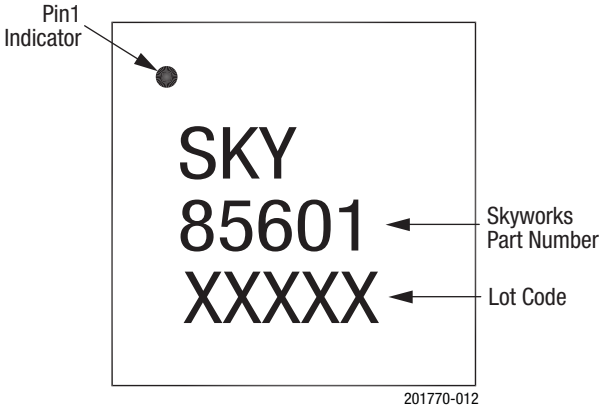

Figure 12. Typical Part Markings (Top View)

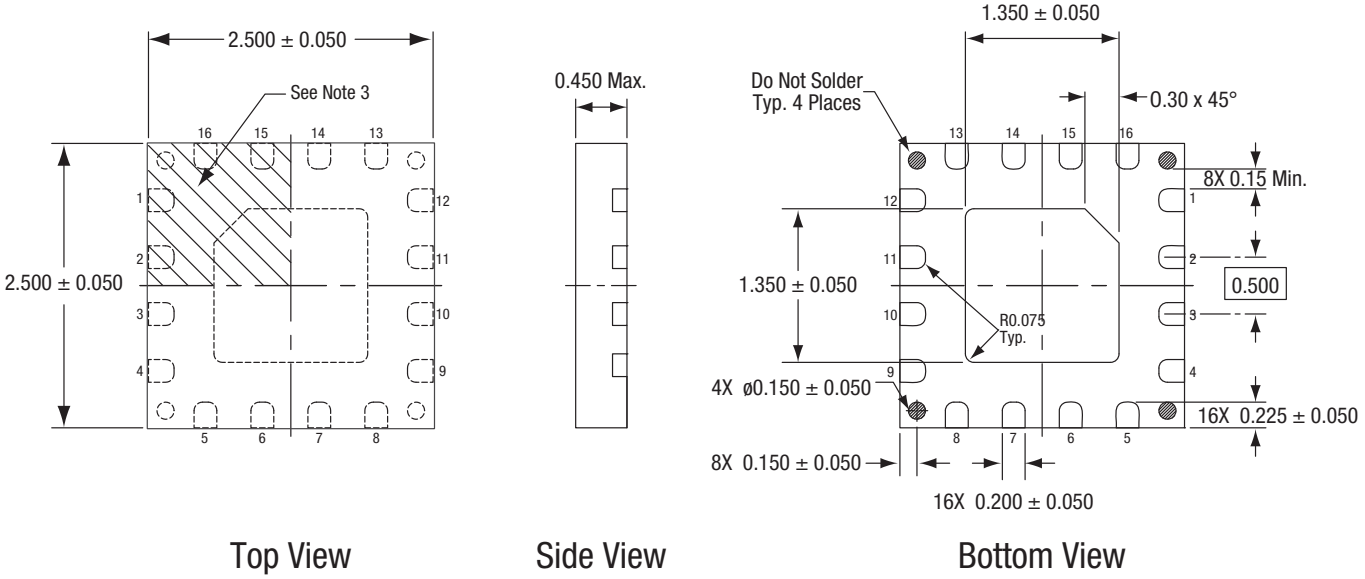

Notes:

1. *All measurements are in millimeters.*
2. *Dimensions and tolerances according to ASME Y14.5M-1994.*
   Unless otherwise specified, the following values apply:
   Decimal Tolerance: *Angular Tolerance:*
   X.X (1 place) ± 0.1 mm ±1°
   X.XX (2 places) ± 0.05 mm
   X.XXX (3 places) ± 0.025 mm
3. *Terminal #1 identification mark located within marked area.*
4. *Unless specified, dimensions are symmetrical about center lines.*

201770-013

Figure 13. SKY85601-11 Package Dimensions

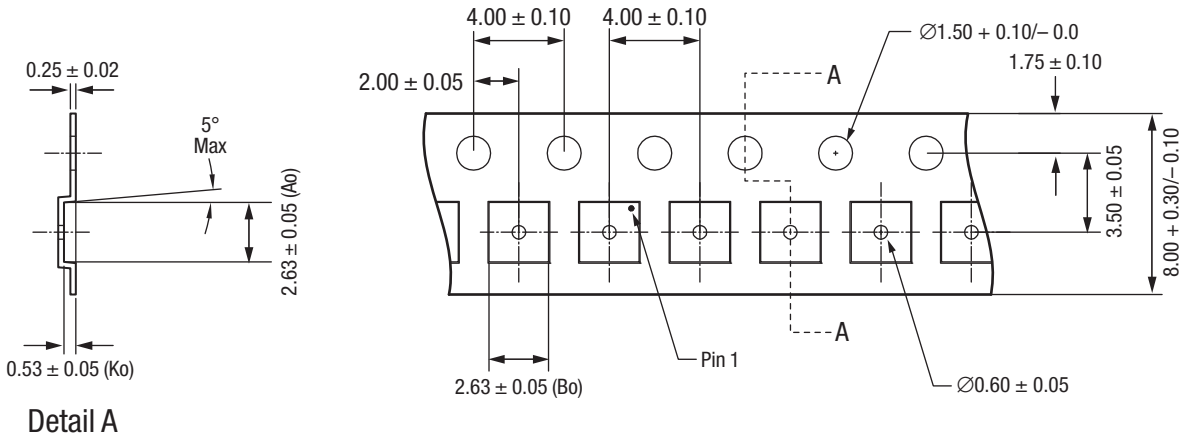

Notes:

1. *10 sprocket hole pitch cumulative tolerance ±0.2 mm.*
2. *Pocket position relative to sprocket hole; measure as true position of pocket, not pocket hole.*
3. *Carrier tape: black conductive polycarbonate.*
4. *Cover tape material: transparent conductive material with 5.4 mm width.*
5. *All measurements are in millimeters.*

201770-014

Figure 14. SKY85601-11 Tape and Reel Dimensions

Ordering Information

Model Name	Manufacturing Part Number	Evaluation Board Part Number
SKY85601-11: SPDT Switch with LNA	SKY85601-11	SKY85601-11EK1

Copyright © 2012-2013, 2015, 2017 Skyworks Solutions, Inc. All Rights Reserved.

Information in this document is provided in connection with Skyworks Solutions, Inc. (“Skyworks”) products or services. These materials, including the information contained herein, are provided by Skyworks as a service to its customers and may be used for informational purposes only by the customer. Skyworks assumes no responsibility for errors or omissions in these materials or the information contained herein. Skyworks may change its documentation, products, services, specifications or product descriptions at any time, without notice. Skyworks makes no commitment to update the materials or information and shall have no responsibility whatsoever for conflicts, incompatibilities, or other difficulties arising from any future changes.

No license, whether express, implied, by estoppel or otherwise, is granted to any intellectual property rights by this document. Skyworks assumes no liability for any materials, products or information provided hereunder, including the sale, distribution, reproduction or use of Skyworks products, information or materials, except as may be provided in Skyworks Terms and Conditions of Sale.

THE MATERIALS, PRODUCTS AND INFORMATION ARE PROVIDED “AS IS” WITHOUT WARRANTY OF ANY KIND, WHETHER EXPRESS, IMPLIED, STATUTORY, OR OTHERWISE, INCLUDING FITNESS FOR A PARTICULAR PURPOSE OR USE, MERCHANTABILITY, PERFORMANCE, QUALITY OR NON-INFRINGEMENT OF ANY INTELLECTUAL PROPERTY RIGHT; ALL SUCH WARRANTIES ARE HEREBY EXPRESSLY DISCLAIMED. SKYWORKS DOES NOT WARRANT THE ACCURACY OR COMPLETENESS OF THE INFORMATION, TEXT, GRAPHICS OR OTHER ITEMS CONTAINED WITHIN THESE MATERIALS. SKYWORKS SHALL NOT BE LIABLE FOR ANY DAMAGES, INCLUDING BUT NOT LIMITED TO ANY SPECIAL, INDIRECT, INCIDENTAL, STATUTORY, OR CONSEQUENTIAL DAMAGES, INCLUDING WITHOUT LIMITATION, LOST REVENUES OR LOST PROFITS THAT MAY RESULT FROM THE USE OF THE MATERIALS OR INFORMATION, WHETHER OR NOT THE RECIPIENT OF MATERIALS HAS BEEN ADVISED OF THE POSSIBILITY OF SUCH DAMAGE.

Skyworks products are not intended for use in medical, lifesaving or life-sustaining applications, or other equipment in which the failure of the Skyworks products could lead to personal injury, death, physical or environmental damage. Skyworks customers using or selling Skyworks products for use in such applications do so at their own risk and agree to fully indemnify Skyworks for any damages resulting from such improper use or sale.

Customers are responsible for their products and applications using Skyworks products, which may deviate from published specifications as a result of design defects, errors, or operation of products outside of published parameters or design specifications. Customers should include design and operating safeguards to minimize these and other risks. Skyworks assumes no liability for applications assistance, customer product design, or damage to any equipment resulting from the use of Skyworks products outside of stated published specifications or parameters.

Skyworks and the Skyworks symbol are trademarks or registered trademarks of Skyworks Solutions, Inc., in the United States and other countries. Third-party brands and names are for identification purposes only, and are the property of their respective owners. Additional information, including relevant terms and conditions, posted at www.skyworksinc.com, are incorporated by reference.