DESCRIPTION: **0.625 CENTER DUAL PORT D-SUB - MALE OVER FEMALE**

25 PIN SHOWN

	DIMENSIONS (IN.)			
	9	15	25	37
A	1.204	1.535	2.078	2.724
B	0.984	1.312	1.850	2.500
C	0.494	0.494	0.494	0.494

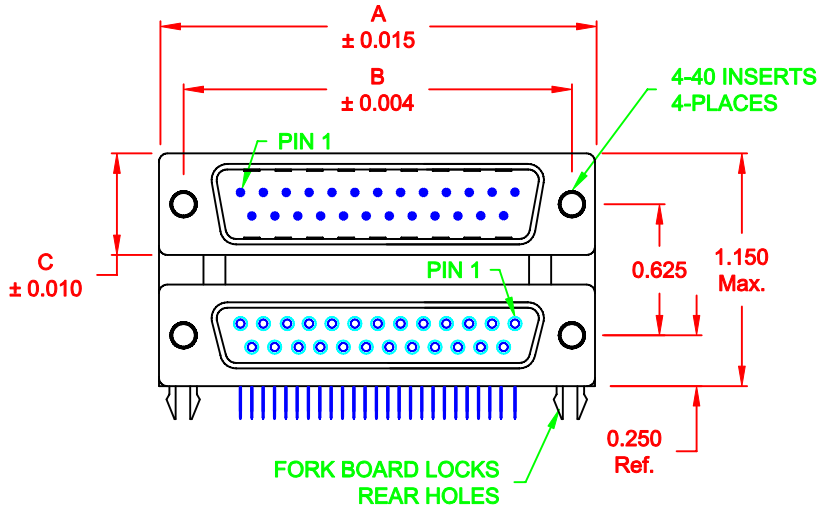

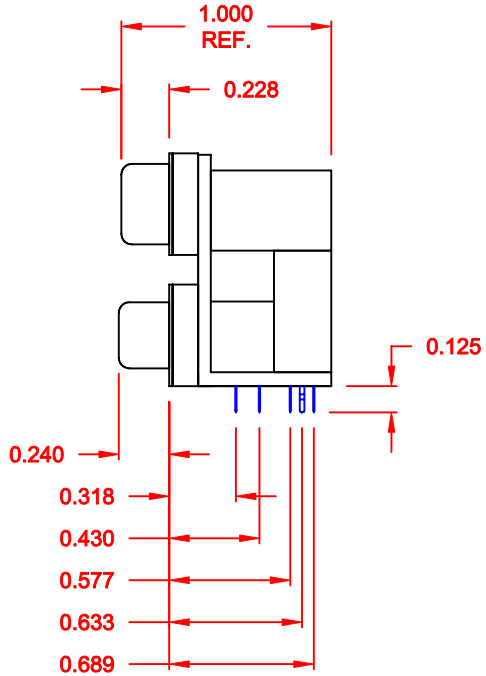

SPECIFICATION:

MATERIAL:

SHELL: STEEL, NICKEL PLATED
INSULATOR: UL 94V-0 RATED, BLACK PA9T, 260° PROCESS TEMP.
CONTACTS: BRASS
CONTACT PLATING: GOLD PLATED ENTIRE CONTACT

ELECTRICAL:

INSULATOR RESISTANCE: 1,000 Ohms Min.
DIELECTRIC STRENGTH: 1,000VAC RMS
CURRENT RATING: 5 AMPS
OPERATING TEMPERATURE: -55° C TO 105° C

189-YYY-413R691

SERIES
POSITIONS
- 009
- 015
- 025
- 037

GENDER
- 31 = FEMALE OVER MALE
- 41 = MALE OVER FEMALE
- 51 = FEMALE OVER FEMALE
- 61 = MALE OVER MALE

SHELL PLATING
- 3 = NICKEL

RoHS COMPLIANT (HIGH TEMP. PROCESS)
HARDWARE OPTIONS
- 69 = 4-40 INSERTS/BOARD LOCKS (REAR)

PLATING OPTIONS
- 1 = GOLD FLASH

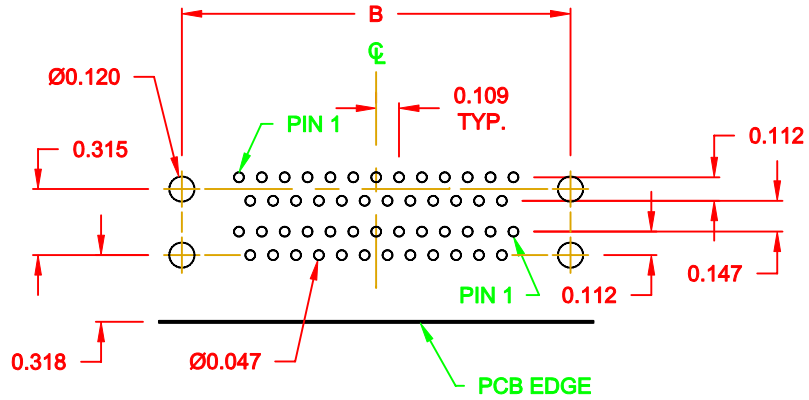

RECOMMENDED PCB LAYOUT

DO NOT SCALE FROM DRAWING

THESE DRAWINGS AND SPECIFICATIONS ARE THE PROPERTY OF NorComp AND SHALL NOT BE REPRODUCED, COPIED OR USED AS THE BASIS FOR THE MANUFACTURE OR SALE OF APPARATUS WITHOUT WRITTEN PERMISSION.

DRAWN: C. SMITH	DATE: 03-30-07	
CHECKED:	DATE:	
SCALE: 1 : 1	SHEET 1 OF 1	REV 4
DWG NO. 189-YYY-413R691		

NorComp

RoHS COMPLIANT