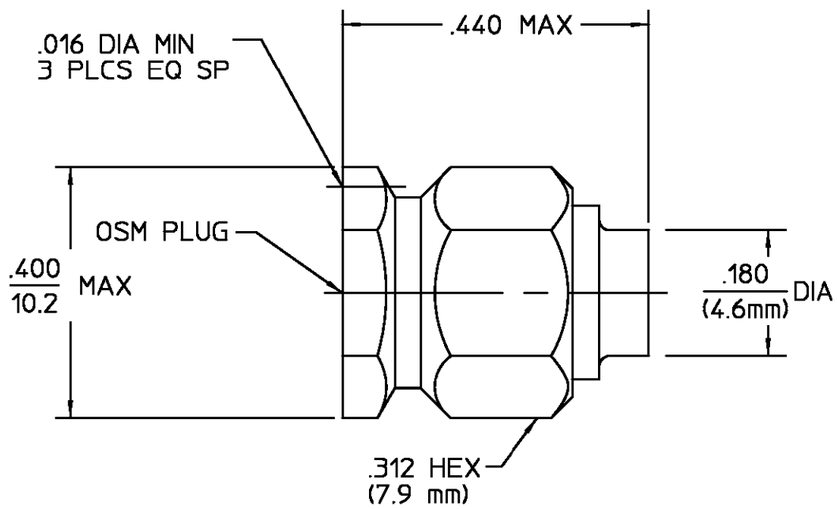

DESIGNED FOR USE WITH .141 DIA S.R. CABLE	
CABLE ENTRY DIAMETER MINIMUM	
CONTACT	.039
HOUSING	.144

REVISIONS

REV	DESCRIPTION	DATE	APPROVED
01_1	REDRAWN ON CAD ECN 94-0474 RMF	2/10/95	RMF 12/10/95

COMPONENT	MATERIAL	FINISH
HOUSING	STAINLESS STEEL PER ASTM-A484 AND ASTM-A582, TYPE 303	GOLD PLATE PER MIL-G-45204
COUPLING NUT	STAINLESS STEEL PER ASTM-A484 AND ASTM-A582, TYPE 303	PASSIVATE PER ASTM-A-380
DIELECTRIC	TFE FLUOROCARBON PER ASTM-D-1457	N/A
CENTER CONTACT	BERYLLIUM COPPER PER ASTM B 196, ALLOY C17300, CONDITION H	GOLD PLATE PER MIL-G-45204
RETAINING RING	BERYLLIUM COPPER PER ASTM B 194, ALLOY C17200, CONDITION H	N/A
GASKET	SILICONE RUBBER PER ZZ-R-765	N/A

ELECTRICAL	MECHANICAL	ENVIRONMENTAL
Nominal Impedance (Ohms) 50	Interface Dimensions MIL-STD-348, Fig. 310.1	Temperature Rating -65°C to 105°C
Frequency Range (GHz) DC to 18.0	Recommended Mating Torque 7 to 10 in-LBs	Vibration MIL-STD-202, Method 204, Condition D
Volt Rating (VRMS MAX) @ Sea Level 500	Mating Characteristics:	Shock MIL-STD-202, Method 213, Condition I
VSWR 1.05 + .008f(GHz)	Insertion (MAX Lbs) N/A	Thermal Shock MIL-STD-202, Method 107, Condition B, Except High Temp 115°C
Insertion Loss (dB MAX) .03 $\sqrt{f(GHz)}$	Withdrawal (MIN Oz) N/A	Moisture Resistance MIL-STD-202, Method 106,
RF Leakage (dB MIN) -(90-f(GHz)	Force to Engage and Disengage (In/Lbs MAX) 2.0	Corrosion - MIL-STD-202, Method 101, Condition B, 5% salt spray
Corona, 70,000 Ft (VRMS MIN) 375	Center Contact Captivation	
Dielectric Withstanding Voltage (VRMS MIN) @ Sea Level 1000	Axial (Lbs) N/A	
Contact Resistance (Milliohms MAX)	Radial (In/Oz) N/A	
Center Contact 3.0	Cable Retention	
Outer Contact 2.0	Axial Force (Lbs) 60	
Cable to Housing 0.5	Torque (In/Oz) 55	
RF High Potential @ Sea Level (VRMS MIN @ 5 MHz) 1000	Weight (Grams) T.B.D.	
I.R.(Megohms MIN) 5,000		

UNLESS OTHERWISE SPECIFIED DIMENSIONS ARE IN INCHES
TOLERANCE ON
FRAC. ± 1/64 DEC. ±.005 ANGLES ± 1°

DRAWN BY TN DATE 7/22/82
CHECKED BY G.S. 7/20/82
APP'D BY RMF 7/23/82

AMP

AMP Incorporated
140 Fourth Avenue
Waltham, MA 02451-7599

These drawings and specifications are the property of Omni Spectra Incorporated and shall not be reproduced or copied or used in whole or in part as the basis for the manufacture or sale of item(s) without written permission.

USE ASS'Y PROCEDURE

NO. A.P. 408-04919 (20-544)

TITLE OSM STRAIGHT CABLE PLUG DIRECT SOLDER ATTACHMENT M39012B3002 CAT B

SIZE	CODE IDENT NO.		REV
B	26805	2001-8002-92	01_1
SCALE 5:1			SHEET 1 OF 1

CUSTOMER DRAWING

AMP PART # 1050776-1
SHEET 1 OF 1 REV A