Alle Rechte vorbehalten/ *All rights reserved*

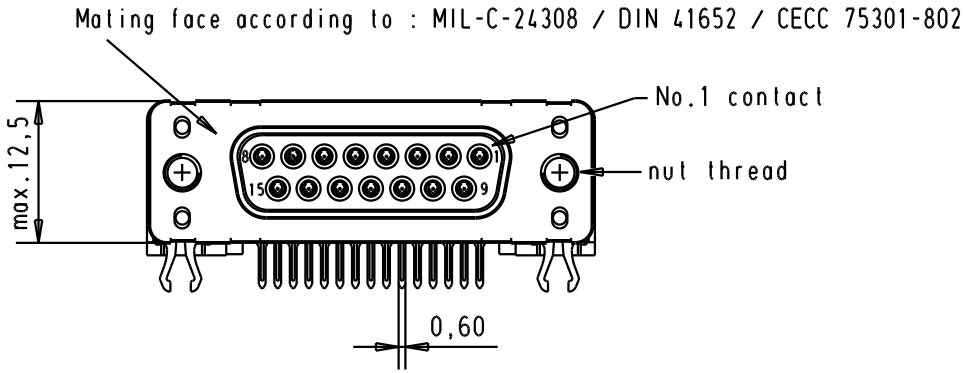

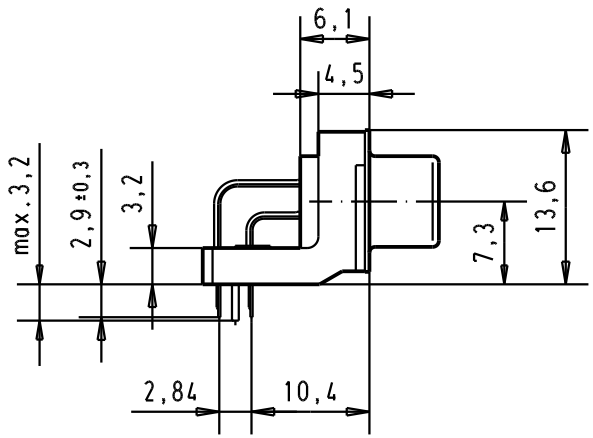

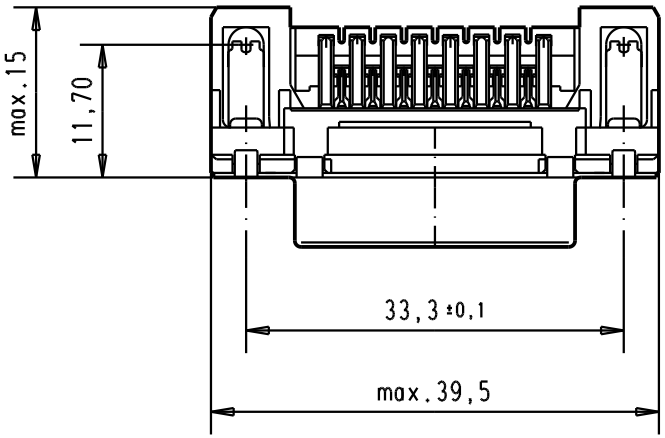

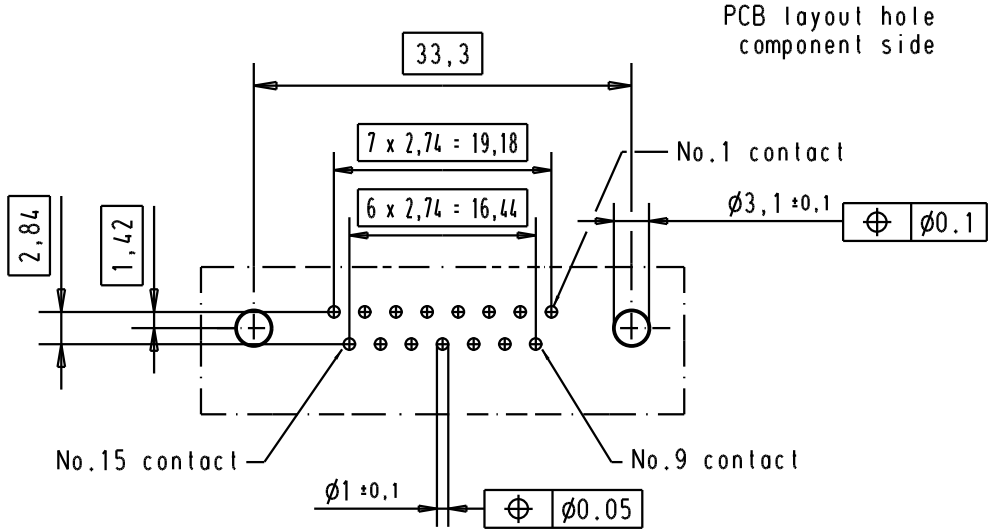

Connector retention and insertion forces on the PCB = 25 / 80 newtons

Part number	Nut thread	Performance level	Mod.	Dat.	Name
09 66 253 3611	M 3	1			
09 66 253 6611	M 3	2			
09 66 253 7611	M 3	3			
09 66 253 3612	4-40 UNC	1	31892	05/05/04	JH
09 66 253 6612	4-40 UNC	2	31084	04/SEP/02	YT
09 66 253 7612	4-40 UNC	3	27960	07/dec/00	ALSPACE

	Dat.	Name
Detail.	07/dec/00	ALSPACE
Insp.		
Stand.		

All Dim. in mm
Orig. Size DIN A 4

D-Sub 15 poles standard angle female, solder pin with nut and grounding board lock.

Maßstab/ *Scale* 1.5:1

HARTING EURL
F-95972 Paris

TB 0966253x61x

Sub.

Blatt/ *Page* 2