REVISIONS					
REV	ECO	DESCRIPTION	DATE	BY	APPR
A1	-	FIRST RELEASE	Jan.12.2018	White	Tommy

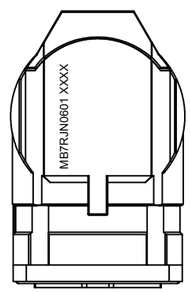

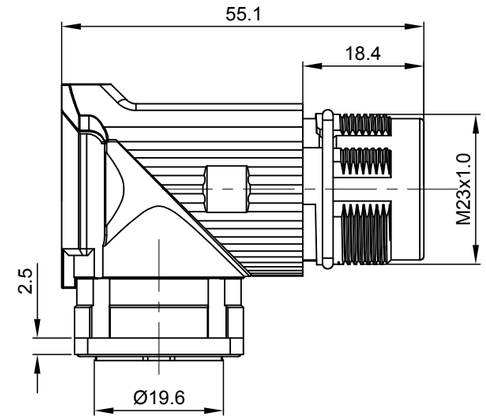

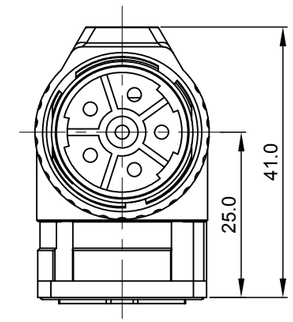

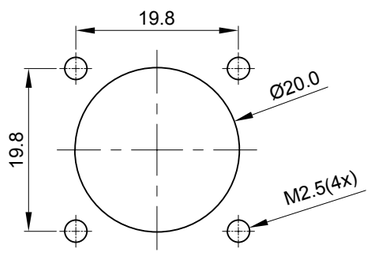

MOUNTING HOLE

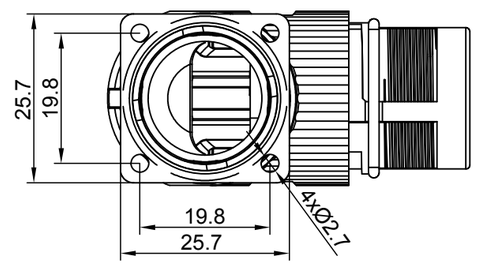

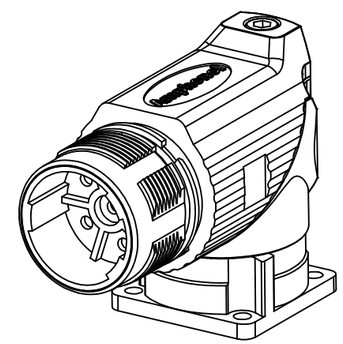

NOTES: UNLESS OTHERWISE SPECIFIED

1. MATERIAL:
   INSULATION INSERT: PA66,UL94 V0
   SEAL: VITON
   HOUSING BODY: ZINC DIE CAST, NICKEL PLATED
   CONTACT: COPPER ALLOY, GOLD PLATED

2. SPECIFICATIONS:
   2.1 CURRENT RATING: 28 AMPS
   2.2 VOLTAGE RATING: 630V AC/DC
   2.3 OPERATING TEMPERATURE: -20°C TO +130°C
   2.4 DIELECTRIC WITHSTANDING VOLTAGE: LESS THAN 2 MILLIAMPS CURRENT LEAKAGE @ 6000 VOLTS AC.
   2.5 DEGREE OF PROTECTION: IP67 (MATED CONDITION)
   2.6 DEGREE OF POLLUTION: 3 PER UL840
   2.7 OVERVOLTAGE CATEGORY: III PER UL840
   2.8 MATING CYCLE DURABILITY: >500 CYCLES
   2.9 RoHS COMPLIANT

3. ALL DIMENSIONS ARE FOR REFERENCE USE ONLY.

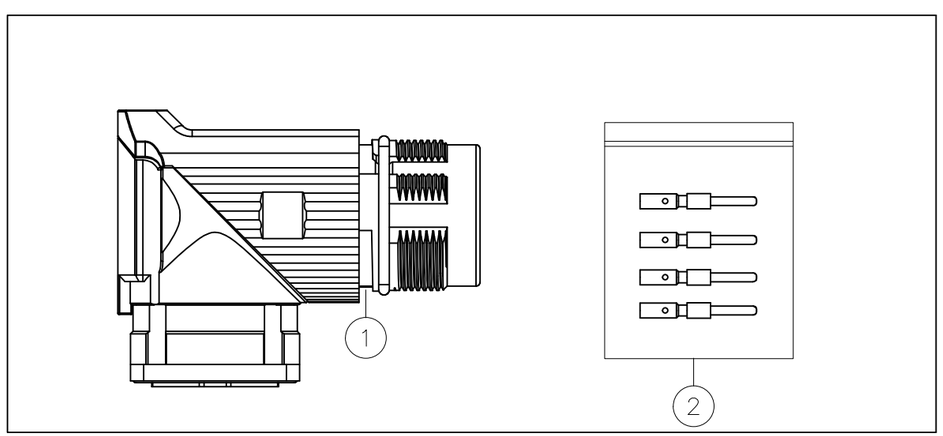

QUANTITY	PART NUMBER	DESCRIPTION	ITEM
6	SC000262	CONTACT, PIN, Ø2.0mm,CRIMP 14~18AWG	2
1	MB7RJN0601	CONNECTOR	1

MATERIALS LIST

UNLESS OTHERWISE SPECIFIED
1) All dimensions are in metric(mm).
2) Tolerances are as follows:
1 PL DEC ±0.30 | Fractions ±1/64
2 PL DEC ±0.15 | Angles ±1°
3 PL DEC ±0.08
3) Note reference = X

MATERIAL SPECIFICATIONS:

PROCESS SPECIFICATIONS:

NEXT ASS'Y:

SIGNATURES		DATE
DRAWN:	White	Jan.12.2018
CHECKED:	Tod	Jan.12.2018
ENGINEER:		
APPROVAL:	Tommy	Jan.12.2018
CUSTOMER:		

THIS DRAWING IS SUPPLIED FOR INFORMATION ONLY. DESIGN FEATURES, SPECIFICATIONS AND PERFORMANCE DATA SHOWN HEREON ARE THE PROPERTY OF THE AMPHENOL CORPORATION. NO RIGHTS OF REPRODUCTION ARE IMPLIED. ALL DIMENSIONS ARE SUBJECT TO NORMAL MANUFACTURING VARIATIONS.

Amphenol
Sine Systems - www.amphenol-sine.com
44724 Morley Drive
Clinton Township, MI 48036

KIT,M23B,REC.,RA,6POS,FLANGE MOUNT

SIZE	TYPE	DWG NO:	REVISION
B	C-	MB7RJN0601-KIT	A1

SCALE: NONE SHEET 1 OF 1

TITLE: KIT,M23B,REC.,RA,6POS,FLANGE MOUNT
DWG NO: MB7RJN0601-KIT
REV: A1
SH: 1
OF: 1