THIS DRAWING IS UNPUBLISHED. RELEASED FOR PUBLICATION -,- .
© COPYRIGHT - By - ALL RIGHTS RESERVED.

LOC	DIST
GP	00

REVISIONS

P	LTR	DESCRIPTION	DATE	DWN	APVD
	K3	REVISED PER ECO-11-004835	11MAR11	RK	HMR

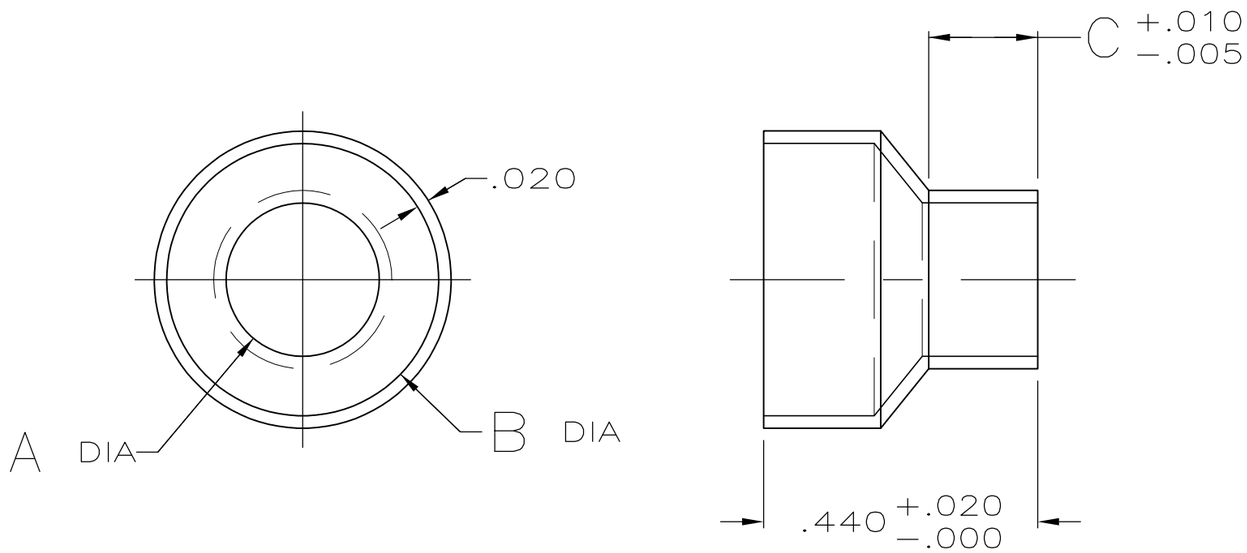

STYLE I (STEPPED)

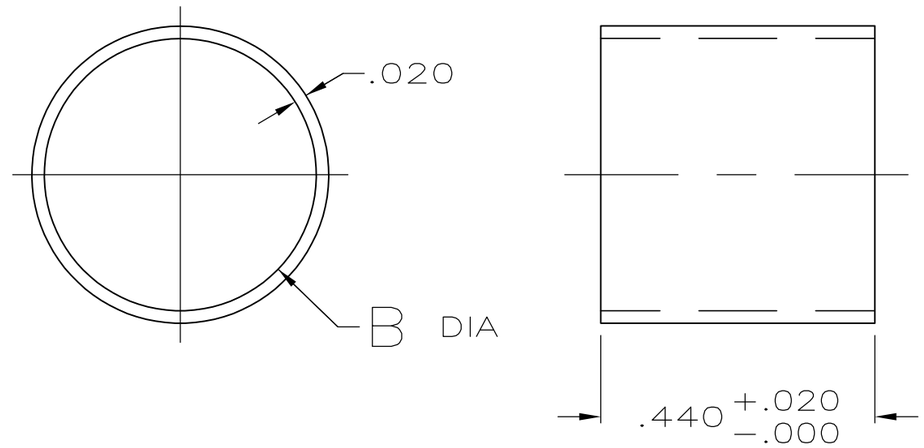

STYLE II (STRAIGHT)

	FINISH	STYLE	INSULATION RANGE DIAMETER, REF	C	B	A	PART NUMBER
	2	I I	.460-.400	-	.460	-	3-747579-6
	2	I	.375-.324	.175	.437	.375	3-747579-4
	2	I	.324-.246	.175	.437	.324	3-747579-2
	2	I	.246-.165	.175	.437	.246	3-747579-0
	2	I I	.437-.375	-	.437	-	2-747579-7
OBSOLETE	1	I I	.460-.400	-	.460	-	1-747579-4
OBSOLETE	1	I I	.437-.375	-	.437	-	1-747579-2
OBSOLETE	1	I	.375-.324	.175	.437	.375	1-747579-1
OBSOLETE	1	I	.324-.246	.175	.437	.324	1-747579-0
OBSOLETE	1	I	.246-.165	.175	.437	.246	747579-8

1 .000200 MIN BRIGHT TIN-LEAD OVER .000100 MIN COPPER.
2 .000200 MIN BRIGHT TIN OVER .000100 MIN COPPER.

THIS DRAWING IS A CONTROLLED DOCUMENT.

DIMENSIONS: INCHES

TOLERANCES UNLESS OTHERWISE SPECIFIED:
0 PLC ± -
1 PLC ± -
2 PLC ± -
3 PLC ± .005
4 PLC ± -
ANGLES ± -

MATERIAL: STEEL, ANNEALED

FINISH: SEE TABLE

DWN B. MCMASTER 21MAY04
CHK J. GERACE 21MAY04
APVD M. WALMSLEY 21MAY04
PRODUCT SPEC —
APPLICATION SPEC —
WEIGHT —

TE Connectivity

NAME: FERRULE, OUTER, SIZES 1 THRU 3, SHIELDING HARDWARE, AMPLIMITE ®

SIZE	CAGE CODE	DRAWING NO	RESTRICTED TO
A3	00779	C-747579	—

CUSTOMER DRAWING | SCALE 4:1 | SHEET 1 OF 1 | REV K3