THIS DRAWING AND DESIGN HEREON CONSTITUTES A PROPRIETARY DESIGN OF PACKARD ELECTRIC DIVISION AND IS NOT TO BE DUPLICATED OR REPRODUCED WITHOUT AUTHORITY OF PACKARD ELECTRIC DIVISION

DO NOT SCALE

PART NO 1209 2059

DATE	SYM	REVISION RECORD	AUTH	DR	CK
01NO91	—	REDRAWN TO LATEST			
		STANDARDS - REV			
		LEVEL REMAINS AT			
		"B"	144974	RKR	CK
24SE12	—	UPDATED PDM ATTRIBUTES			
		"B1"	419776	LES	AH

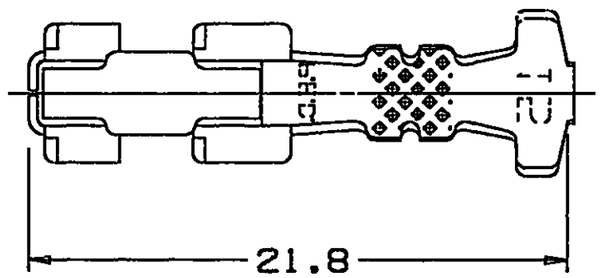

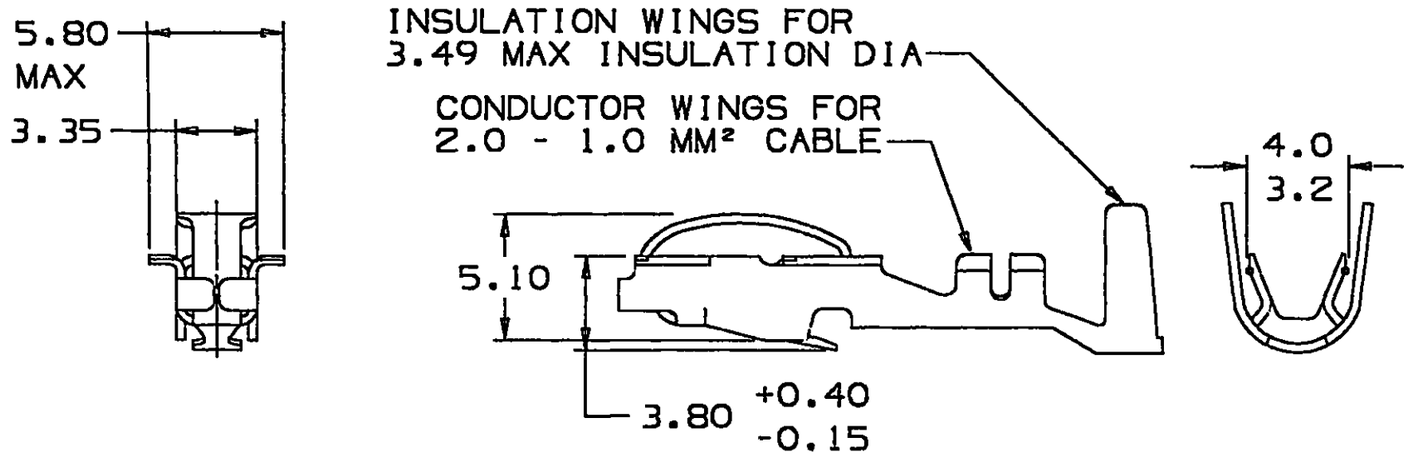

NOTES—1. THIS TERMINAL ACCEPTS 12015323 CABLE SEAL OR EQUIVALENT.
2. MATES TO LAMP SOCKET 12066688 OR EQUIVALENT.

Unigraphics II

THIRD ANGLE PROJECTION

METRIC

DIMENSIONS ARE IN MILLIMETERS UNLESS OTHERWISE SPECIFIED

TOLERANCE UNLESS OTHERWISE SPECIFIED
DECIMAL: ANGULAR ± 2°
ONE PLACE ± 0.3
TWO PLACE ± 0.15

CODE NO 6901	QC		
DWG DATE 28JL88		DR J.HOUGELMAN	28JL88
SCALE NONE		CK T.MUDREY	19AU88
REFERENCE NO 12092060"A0"SIZE		APPR P.REEDY	22AU88
		APPR T.E.GENT	22AU88

MATERIAL SPEC
0.36 THICK TIN BRASS - TIN PLATED

NAME
TERM LP SOC WGE BSE

PART NUMBER
1209 2059
OUTLINE DRAWING

SIZE A3

GENERAL MOTORS CORPORATION
WARREN, OHIO