THIS DRAWING IS UNPUBLISHED. RELEASED FOR PUBLICATION 20
© COPYRIGHT 20 BY - ALL RIGHTS RESERVED.

REVISIONS

P	LTR	DESCRIPTION	DATE	DWN	APVD
	A	INITIAL	23JUN2015	DW	CW

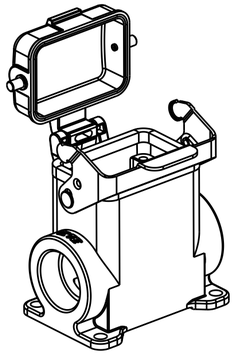

SCALE 1:2

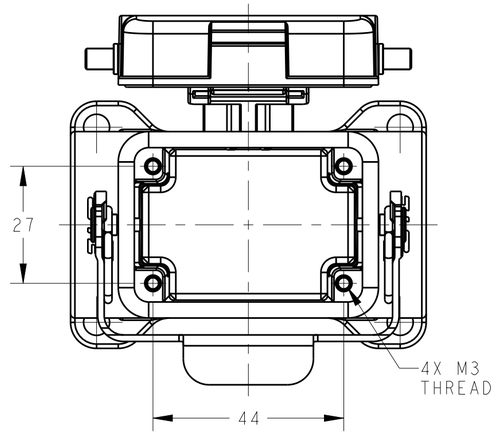

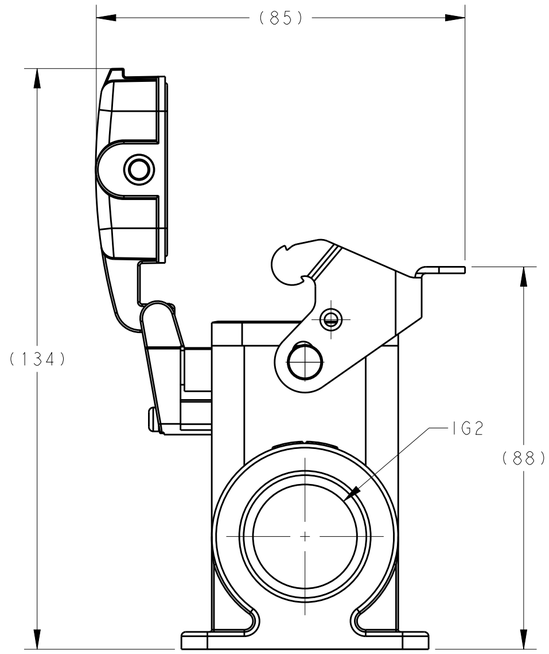

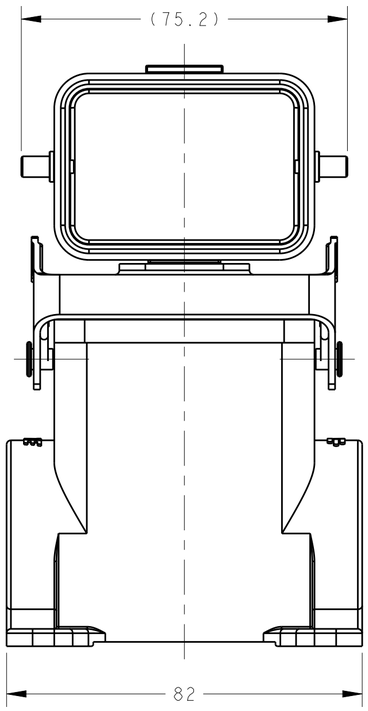

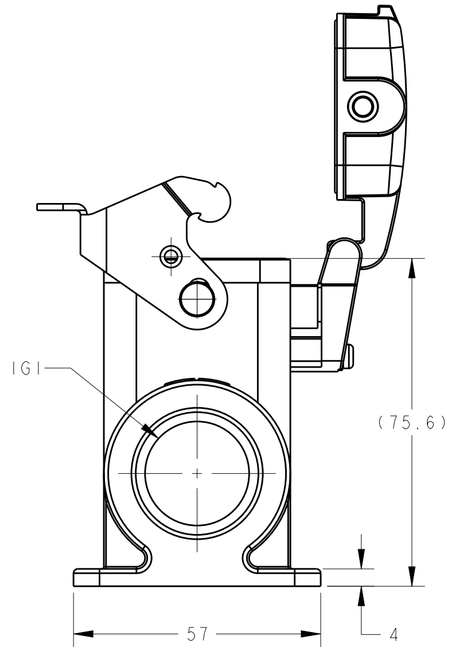

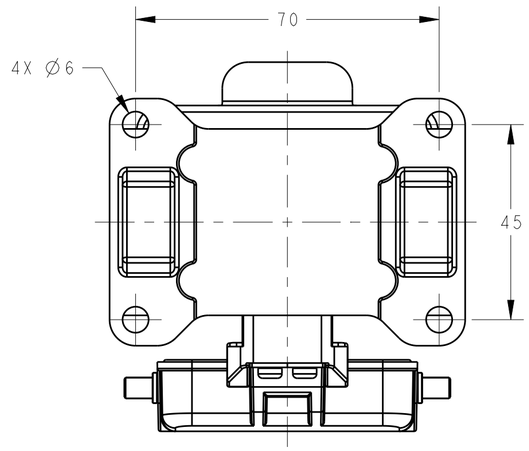

NOTES:
1. TECHNICAL CHARACTERISTICS:
   HOUSING MATERIAL: DIE CAST ALUMINIUM ALLOY
   SURFACE: POWDER COATED, GREY
   OPERATION TEMPERATURE: -40-+125°C
   DEGREE OF PROTECTION: IP65 (MATED)

注释：
1. 技术参数：
   表面安装下壳材料： 铝合金
   表面处理： 粉末涂层，灰色
   工作温度： -40-+125°C
   防护等级： IP65(配合)

PART NUMBER	DESCRIPTION	IG1	IG2
T1660063321-000	H6B-SDRHM-PG21	PG21	-
T1660063329-000	H6B-SDRHM-PG29	PG29	-
T1660063332-000	H6B-SDRHM-M32	M32	-
T1660060220-000	H6B-SDRHM-2M20	M20	M20
T1660063421-000	H6B-SDRHM-2PG21	PG21	PG21
T1660063429-000	H6B-SDRHM-2PG29	PG29	PG29
T1660063432-000	H6B-SDRHM-2M32	M32	M32

THIS DRAWING IS A CONTROLLED DOCUMENT.

DIMENSIONS: mm

TOLERANCES UNLESS OTHERWISE SPECIFIED:
0 PLC ±-
1 PLC ±-
2 PLC ±-
3 PLC ±-
4 PLC ±-
ANGLES ±-

MATERIAL - -
FINISH - -

DWN 23JUN2015 David Wang
CHK 23JUN2015 Chris Wang
APVD 23JUN2015 Xiang Xu
PRODUCT SPEC 108-137013
APPLICATION SPEC 114-137013
WEIGHT -

TE Connectivity

NAME H6B-SDRHM-M/PG

SIZE	CAGE CODE	DRAWING NO	RESTRICTED TO
A2	00779	C-T166006XXXX000	-

Customer Drawing

SCALE 1:1 SHEET 1 OF 1 REV A

1471-9 (3/13)