REVISIONS				
REV. SYM.	E.C.O. NUMBER	DESCRIPTION	BY DATE	APP'D DATE
1		ORIGINAL RELEASE	DC 5-12-95	DD 5-12-95

UNCONTROLLED DOCUMENT WILL NOT BE UPDATED

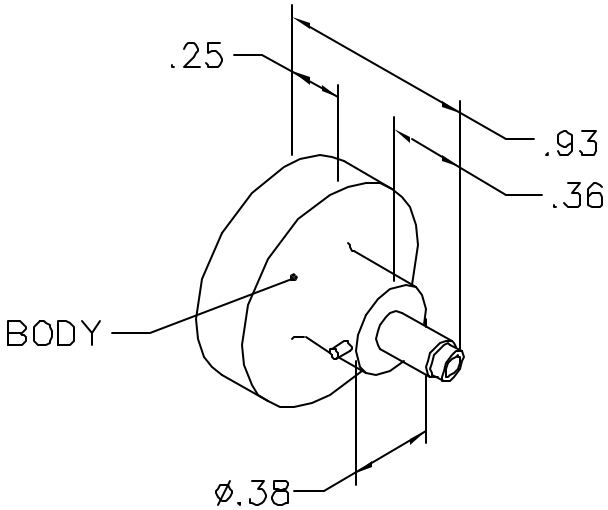

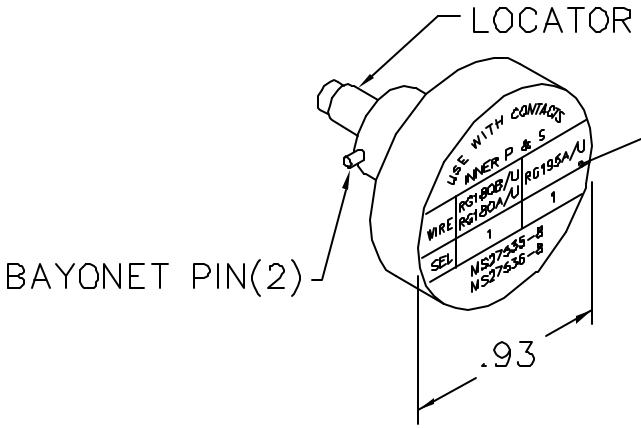

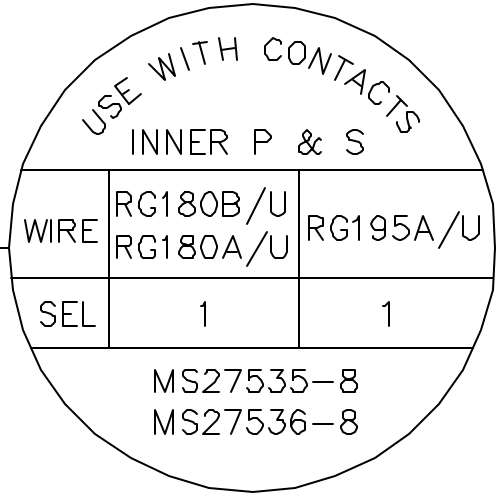

NOTE: FOR USE WITH DANIELS CRIMP TOOLS ACCOMMODATING "K" SERIES POSITIONERS

LOCATOR	
HOLE DIMENSIONS	ADDITIONAL FEATURES
ø.055 ↧.430	⌴ ø.078 ↧.024

RESTRICTED & CONFIDENTIAL

CONFIDENTIAL PROPERTY OF DANIELS MANUFACTURING CORP. NOT TO BE DISCLOSED TO OTHERS, REPRODUCED OR USED FOR ANY OTHER PURPOSE, EXCEPT AS AUTHORIZED IN WRITING BY DANIELS MANUFACTURING. MUST BE RETURNED TO DANIELS MANUFACTURING CORP. ON COMPLETION OF ORDER OR OTHER PURPOSE FOR WHICH LENT.

DO NOT SCALE DRAWING

DRN.	DC	DATE 5-12-95
CHK'D.	DD	DATE 5-12-95
APP'D.		DATE
APP'D.		DATE

NOTE: THIS DRAWING IS AN OUTLINE DRAWING OF THE RESPECTIVE DMC PART NUMBER INDICATED. ACTUAL DMC PART NUMBER IS DRAWING NUMBER WITHOUT THE "-ENV" SUFFIX.

DMC DANIELS MANUFACTURING CORP. ORLANDO, FLORIDA CAGE 11851

TITLE ENVELOPE DRAWING POSITIONER M22520/2-31

WHERE USED: AFM8

SIZE	SCALE	CAD P/N	SHEET	OF
A	NTS	K406-ENV	1	1

POSTING	DWG. NO.	REV.
	K406-ENV	1