REFERENCE SPECIFICATIONS

-NFC 93425 (in compliance with HE 507)

PHYSICAL CHARACTERISTICS

-INSULATOR MATERIAL: THERMOPLASTIC ,UL94V0
-CONTACT MATERIAL: BRASS
-ACCESSORIES: BRASS
-SHELLS: STEEL

ELECTRICAL CHARACTERISTICS

-NOMINAL CURRENT: 30A
-CONTACT RESISTANCE: <= 7.3 m ohms
-CONTACT/CONTACT : >=1000 V
-CONTACT/GROUND : >=1200 V
-INSULATION RESISTANCE: >=5000 MOhms

ENVIRONMENTAL CHARACTERISTICS

- CLIMATIC CATEGORY: 55/125/21
  TEMPERATURE RANGE -55°C TO +125°C
  DAMP HEAT STEADY STATE 21 DAYS
  SALT SPRAY 24 HOURS

MECHANICAL CHARACTERISTICS

- RETENTION AGAINST TORQUE: - Threaded insert: 0.7 N.m minimum
  - Female screw : 0.5 N.m minimum

DBL5W5S700G30LF

Series

Shell size: **E A B C**
see sheet 3

Front accessory definition
see sheet 2

blank :without accessory
L :threaded insert M3
O :threaded insert UNC 4-40
V :female screw UNC 4-40

Layout of contacts (see sheets)

Contacts

S :Socket

Termination type

7 Right angle/USA

Plating

00 200 matings/unmatings
43 500 matings/unmatings

PCB accessories definition
see sheet 2

A :without accessory
H :Metal brackets+harpoons for PCB 2.40mm
G :Metal brackets+harpoons for PCB 1.60mm
M :Metal brackets

Power contacts

00 :Not fitted with power contact (signal contacts always fitted)
30 :Fitted with power contacts 30 Amp.

See note RoHS

NOTE RoHS INFORMATION

- The "LF" products meet european union Directives and other country regulations as described in GS-22-008.
- The housing will whistand exposure to 260°C peak temperature for 3.5 seconds in a wave solder application with a 1.6mm minimum thick circuit board. See application notes/procedures if they are available.
- Termination plating spec:
  - Ni 1.27µmi+Sn 2.5 to 7.5µ(pure bright
- Active area plating spec:
  -Ni + Gold
- Shell plating :2 to 4µm Cu + Ni + 3 to 10µmm Sn(pure bright)
- Accessories: Sn pure bright + Nickel
- Packaging spec: See GS-14-920

TABLE 1:PCB HOLE DIAMETERS

	POWER CONTACTS		ACCESSORIES
30 A	Ø2.00	Ø2.40	Ø3.10
Max current power	ØA +0.1 0	PCB HOLE +/-0.1	PCB HOLE +/-0.1

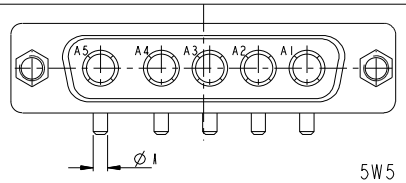

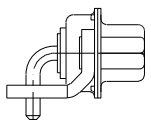

5W5 FOR EXAMPLE

rev	ecn no	dr	date
A	LS05-0113	MPE	2005-10-11
B	LS06-0208	LGO	2006-12-13
C	LS07-0085	MPE	2007/03/21
D	LS07-0273	MPE	2007/11/05
E	F09-0092	LSA	2009/09/16
-	-	-	-
-	-	-	-

www.fciconnect.com

Dr	M PESSON	2005-10-11	ANGULAR	LINEAR	0.X	±0.3	size A2
Eng	P LEGARE	2005-10-11			0.XX	±0.1	
Chr			0° ±2°		0.XXX	±0.05	ECN F09-0092
Appr			Product family			-	Spec ref

surface - ISO 1302 √
tolerance std ISO 406 ISO 1101
TOLERANCES UNLESS OTHERWISE SPECIFIED
projection
mm
Scale 2:1

title: SUB FEMALE DW US foot print
full power right angled solder
dwg no C01-8639-2309
Rev. E
catalog no -
CUSTOMER
sheet 1 of 5

REV E - 2008-03-28

Copyright FCI.

PDM: Rev:E STATUS: Released Printed: Apr 28, 2015
PDM: Rev:E STATUS: Released Printed: Jun 19, 2015

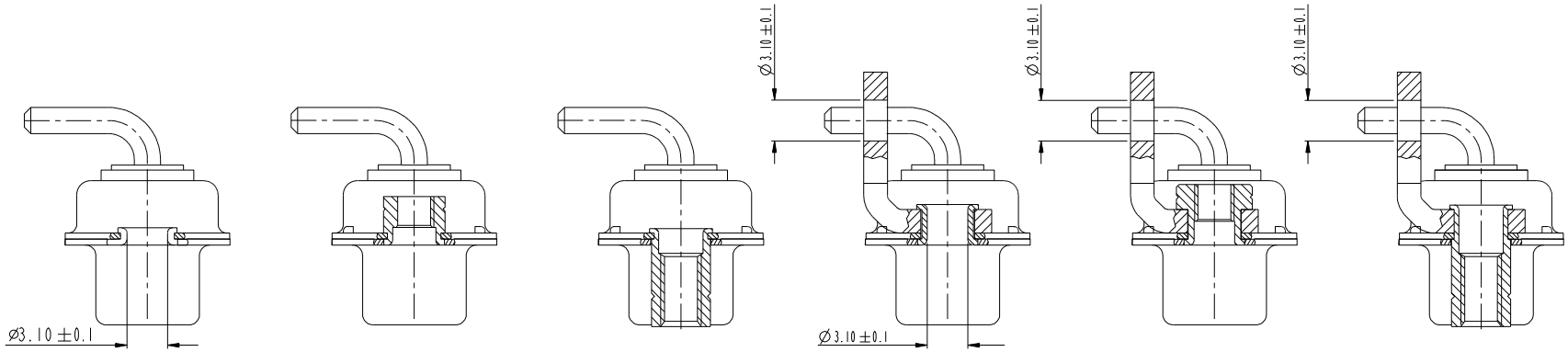

FRONT ACCESSORY	**Blank** Without	**L** insert M3 **O** insert UNC 4.40	**V** insert UNC 4.40	**Blank** Without	**L** insert M3 **O** insert UNC 4.40	**V** insert UNC 4.40
PCB ACCESSORIES	**A** Without	**A** Without	**A** Without	**M** Metal brackets	**M** Metal brackets	**M** Metal bracket

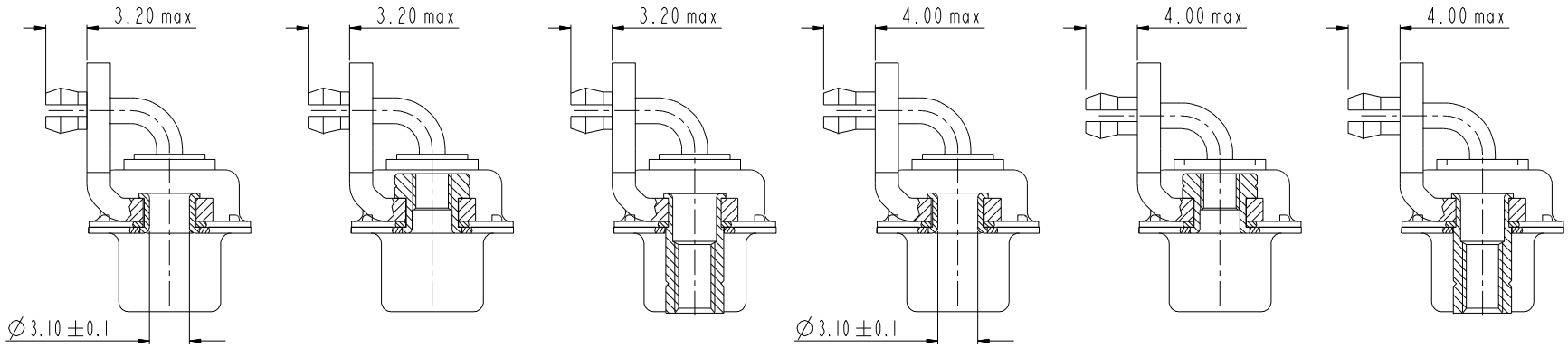

FRONT ACCESSORY	**Blank** Without	**L** insert M3 **O** insert UNC 4.40	**V** insert UNC 4.40	**Blank** Without	**L** insert M3 **O** insert UNC 4.40	**V** insert UNC 4.40
PCB ACCESSORIES	**G** Metal brackets + harpoons for PCB 1.60mm	**G** Metal brackets + harpoons for PCB 1.60mm	**G** Metal brackets + harpoons for PCB 1.60mm	**H** Metal brackets + harpoons for PCB 2.40mm	**H** Metal brackets + harpoons for PCB 2.40mm	**H** Metal brackets + harpoons for PCB 2.40mm

SCALE:4

www.fciconnect.com			surface ISO 1302 - ✓	tolerance std ISO 406 ISO 1101		projection	mm
			TOLERANCES UNLESS OTHERWISE SPECIFIED				
Dr	M PESSON	2005-10-11	ANGULAR	LINEAR	0.X ±0.3	size A2	Scale 2:1
Eng	P LEGARE	2005-10-11			0.XX ±0.1		
Chr			0° ±2°		0.XXX ±0.05	ECN	F09-0092
Appr			Product family -			Spec ref	
title	SUB FEMALE DW US foot print full power right angled solder				dwg no	C01-8639-2309	Rev. E
catalog no					CUSTOMER		sheet 2 of 5

Copyright FCI.

PDM: Rev: E STATUS: Released Printed: Apr 28, 2015
PDM: Rev: E STATUS: Released Printed: Jun 19, 2015

PART NUMBER	AMPS	MATINGS/ UNMATINGS	FRONT ACCESSORY	PCB ACCESSORIES
D*xWxS700A30LF	30	200	without	without
D*LxWxS700A30LF	30	200	insert M3	without
D*OxWxS700A30LF	30	200	insert UNC 4.40	without
D*VxWxS700A30LF	30	200	female screw UNC 4.40	without
D*xWxS700H30LF	30	200	without	metal bracket+harpoon PCB 2.40mm
D*LxWxS700H30LF	30	200	insert M3	metal bracket+harpoon PCB 2.40mm
D*OxWxS700H30LF	30	200	insert UNC 4.40	metal bracket+harpoon PCB 2.40mm
D*VxWxS700H30LF	30	200	female screw UNC 4.40	metal bracket+harpoon PCB 2.40mm
D*xWxS700G30LF	30	200	without	metal bracket+harpoon PCB 1.60mm
D*LxWxS700G30LF	30	200	insert M3	metal bracket+harpoon PCB 1.60mm
D*OxWxS700G30LF	30	200	insert UNC 4.40	metal bracket+harpoon PCB 1.60mm
D*VxWxS700G30LF	30	200	female screw UNC 4.40	metal bracket+harpoon PCB 1.60mm
D*xWxS700M30LF	30	200	without	metal bracket
D*LxWxS700M30LF	30	200	insert M3	metal bracket
D*OxWxS700M30LF	30	200	insert UNC 4.40	metal bracket
D*VxWxS700M30LF	30	200	female screw UNC 4.40	metal bracket

shell size #	LAYOUTS xWx
E	2V2
A	3V3
A	3W3
B	5W5
C	8W8

PART NUMBER	AMPS	MATINGS/ UNMATINGS	FRONT ACCESSORY	PCB ACCESSORIES
D*xWxS743A30LF	30	500	without	without
D*LxWxS743A30LF	30	500	insert M3	without
D*OxWxS743A30LF	30	500	insert UNC 4.40	without
D*VxWxS743A30LF	30	500	female screw UNC 4.40	without
D*xWxS743H30LF	30	500	without	metal bracket+harpoon PCB 2.40mm
D*LxWxS743H30LF	30	500	insert M3	metal bracket+harpoon PCB 2.40mm
D*OxWxS743H30LF	30	500	insert UNC 4.40	metal bracket+harpoon PCB 2.40mm
D*VxWxS743H30LF	30	500	female screw UNC 4.40	metal bracket+harpoon PCB 2.40mm
D*xWxS743G30LF	30	500	without	metal bracket+harpoon PCB 1.60mm
D*LxWxS743G30LF	30	500	insert M3	metal bracket+harpoon PCB 1.60mm
D*OxWxS743G30LF	30	500	insert UNC 4.40	metal bracket+harpoon PCB 1.60mm
D*VxWxS743G30LF	30	500	female screw UNC 4.40	metal bracket+harpoon PCB 1.60mm
D*xWxS743M30LF	30	500	without	metal bracket
D*LxWxS743M30LF	30	500	insert M3	metal bracket
D*OxWxS743M30LF	30	500	insert UNC 4.40	metal bracket
D*VxWxS743M30LF	30	500	female screw UNC 4.40	metal bracket

Copyright FCI.

www.fciconnect.com

surface - ISO 1302 ✓ | tolerance std ISO 406 ISO 1101 | projection | mm

TOLERANCES UNLESS OTHERWISE SPECIFIED

Dr	M PESSON	2005-10-11	ANGULAR	LINEAR	0.X	±0.3	size A2
Eng	P LEGARE	2005-10-11			0.XX	±0.1	Scale 2:1
Chr			0° ±2°		0.XXX	±0.05	ECN F09-0092
Appr			Product family -				Spec ref

title: SUB FEMALE DW US foot print
full power right angled solder

dwg no: C01-8639-2309 | Rev. E

catalog no - | CUSTOMER | sheet 3 of 5

PDM: Rev E STATUS: Released Printed: Apr 28, 2015
PDM: Rev E STATUS: Released Printed: Jun 19, 2015

2V2

LAYOUT AND CONNECTOR DIMENSIONS

For PCB hole diameters see table 1 sheet 1

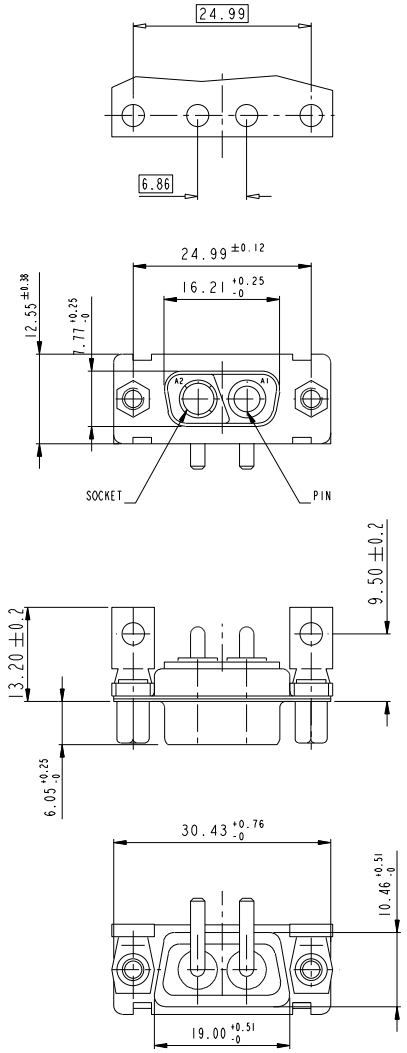

3V3

LAYOUT AND CONNECTOR DIMENSIONS

For PCB hole diameters see table 1 sheet 1

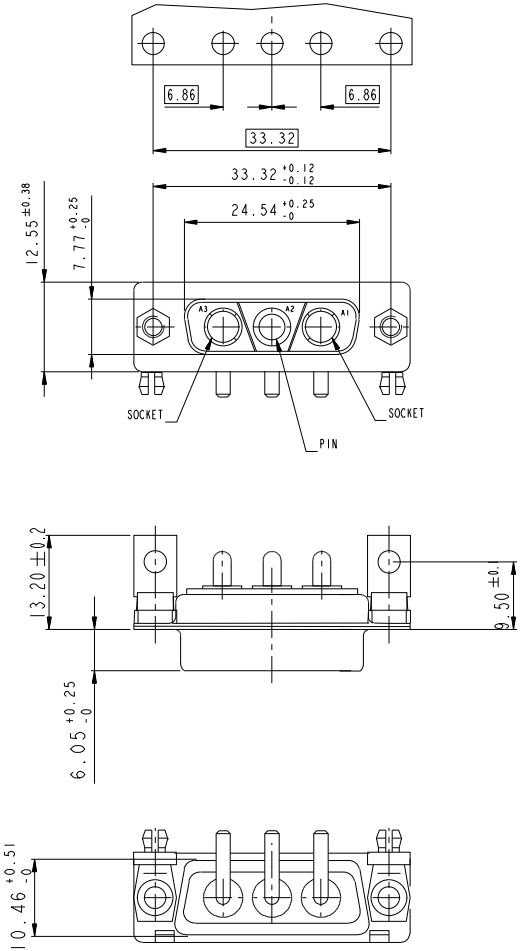

3W3

LAYOUT AND CONNECTOR DIMENSIONS

For PCB hole diameters see table 1 sheet 1

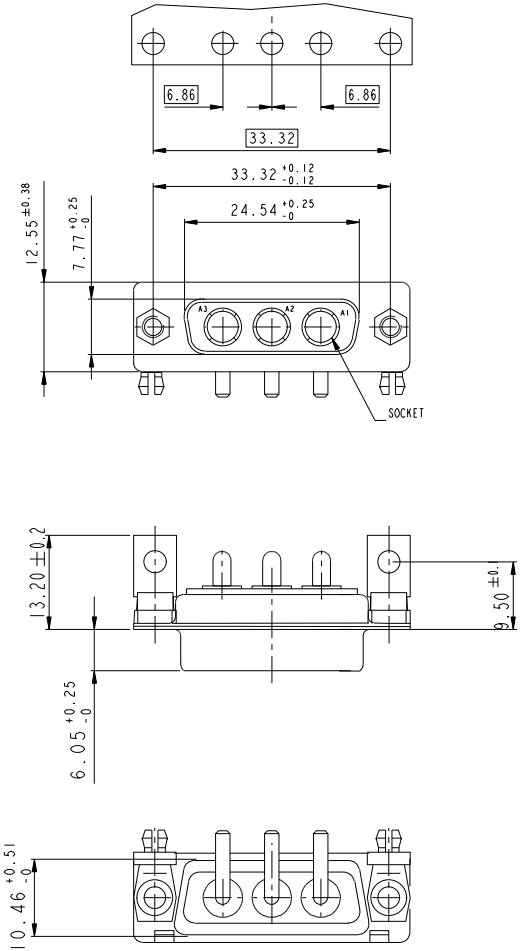

SIDE VIEW FOR ALL LAYOUTS

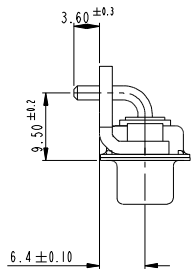

www.fciconnect.com			surface - ISO 1302		tolerance std ISO 406 ISO 1101		projection	mm	
			TOLERANCES UNLESS OTHERWISE SPECIFIED						
Dr	M PESSON	2005-10-11	ANGULAR	LINEAR	0.X	±0.3	size	Scale	
Eng	P LEGARE	2005-10-11			0.XX	±0.1	A2	2:1	
Chr			0° ±2°		0.XXX	±0.05	ECN	F09-0092	
Appr			Product family			-	Spec ref		
FCI	title	SUB FEMALE DW US foot print full power right angled solder			dwg no	C01-8639-2309		Rev. E	
	catalog no				CUSTOMER		sheet 4 of 5		

Copyright FCI.

REV E - 2006-03-20

PDM: Rev E STATUS: Released Printed: Jun 19, 2015
PDM: Rev E STATUS: Released Printed: Apr 28, 2015

5W5

LAYOUT AND CONNECTOR DIMENSIONS

For PCB hole diameters see table 1 sheet 1

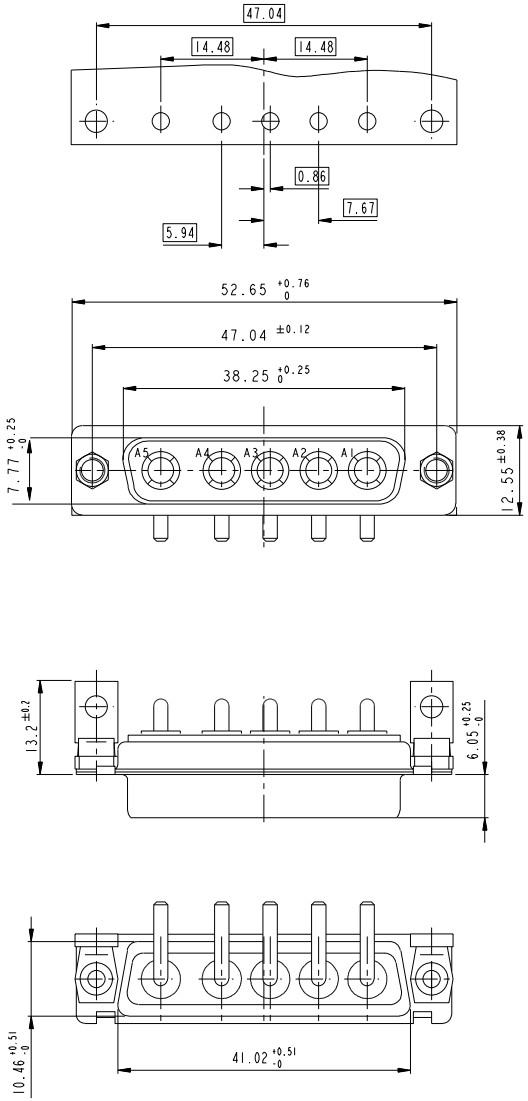

8W8

LAYOUT AND CONNECTOR DIMENSIONS

For PCB hole diameters see table 1 sheet 1

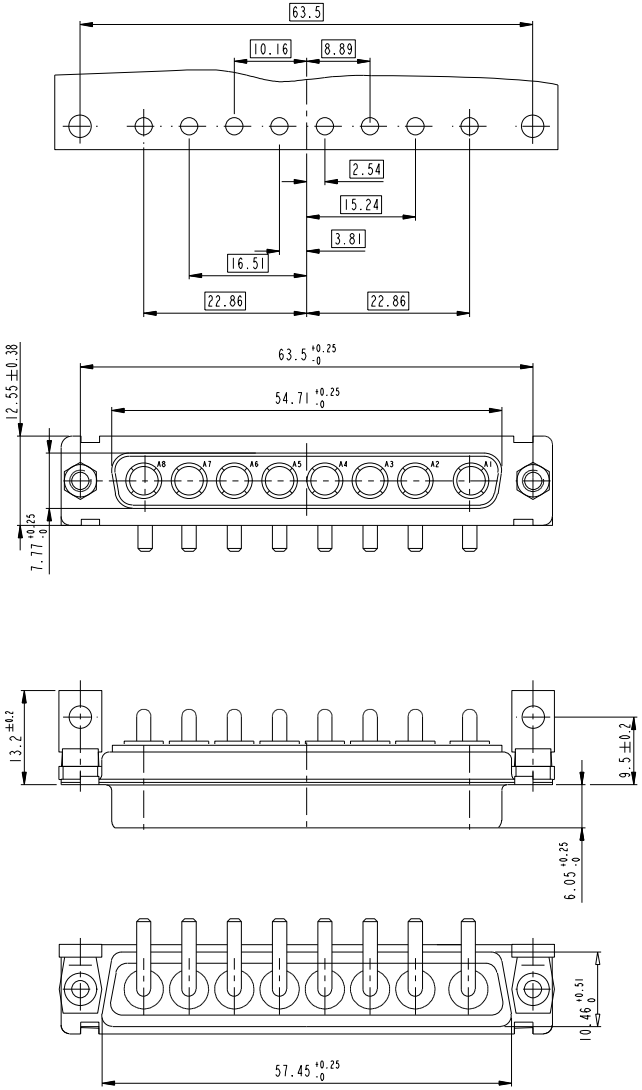

www.fciconnect.com			surface ISO 1302 -		tolerance std ISO 406 ISO 1101		projection	mm	
			TOLERANCES UNLESS OTHERWISE SPECIFIED						
Dr	M PESSON	2005-10-11	ANGULAR	LINEAR	0.X	±0.3	size A2	Scale 2:1	
Eng	P LEGARE	2005-10-11			0.XX	±0.1			
Chr			0° ±2°		0.XXX	±0.05	ECN	F09-0092	
Appr			Product family -				Spec ref		
FCI	title SUB FEMALE DW US foot print full power right angled solder				dwg no C01-8639-2309			Rev. E	
	catalog no -				CUSTOMER			sheet 5 of 5	

Copyright FCI.

REV E - 2008-03-20

PDM: Rev E STATUS: Released Printed: Jun 19, 2015
Released Printed: Apr 28, 2015