THIS DRAWING IS A CONTROLLED DOCUMENT FOR TYCO ELECTRONICS CORPORATION
IT IS SUBJECT TO CHANGE AND THE CONTROLLING ENGINEERING ORGANIZATION
SHOULD BE CONTACTED FOR THE LATEST REVISION.

LOC	DIST
E	B

REVISIONS

P	LTR	DESCRIPTION	DATE	DWN	APVD
	BA	NEW RELEASE	09-Sep-08	SM	St.P

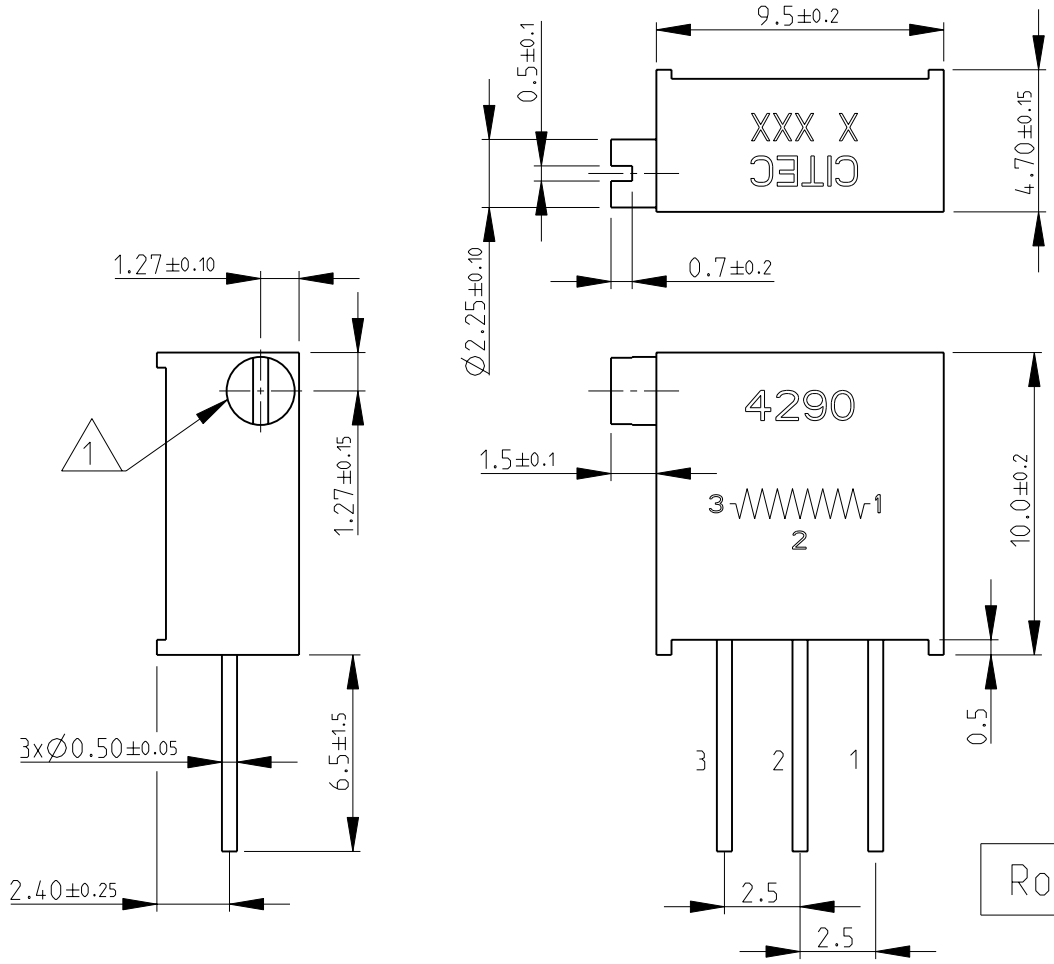

RoHS Compliant

1 SIDE ADJUSTMENT SCREW

2 FOR FURTHER INFORMATION SEE DATA SHEET FOR 4290 SERIES-PROFESSIONAL TRIMMERS

PCB PIERCING PLAN

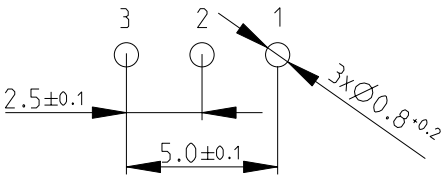

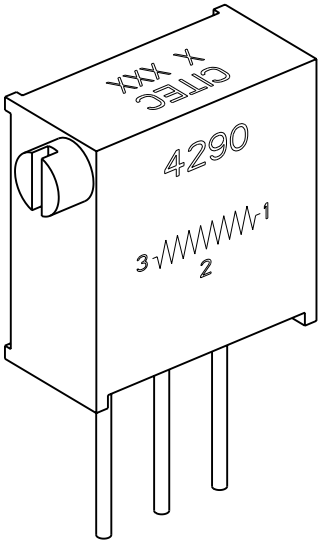

THIS DRAWING IS UNPUBLISHED. RELEASED FOR PUBLICATION 2008
© COPYRIGHT 2008 BY TYCO ELECTRONICS CORPORATION. ALL RIGHTS RESERVED.

DIMENSIONS: mm	DWN SUBHASH.M 09-Sep-08	MATERIAL –	FINISH –
TOLERANCES UNLESS OTHERWISE SPECIFIED:	CHK PRAKASH.S 09-Sep-08	Tyco Electronics	Tyco Electronics Corporation, Dorcan, Swindon, SN3 5HH
0 PLC ±0.5 1 PLC ±0.2 2 PLC ±0.1 3 PLC ±- 4 PLC ±- ANGLES ±5°	APVD STEPHEN.P 09-Sep-08	NAME	PROFESSIONAL TRIMMERS SERIES 4290X
	PRODUCT SPEC –	SIZE A4 / CAGE CODE 00779	DRAWING NO C-1623850 / RESTRICTED TO –
	APPLICATION SPEC –		
	WEIGHT –		
	CUSTOMER DRAWING	SCALE 4:1	SHEET 1 OF 1 / REV BA

AMP 1469-35 REV 31MAR2000

Pro/ENGINEER DRAWING