REFERENCE SPECIFICATIONS

-NFC 93425 (in compliance with HE 507)

PHYSICAL CHARACTERISTICS

-INSULATOR MATERIAL: THERMOPLASTIC UL94V0

-CONTACT MATERIAL: BRASS(SIGNAL CONTACT)
GOLD OVER NICKEL

-ACCESSORIES: STAINLESS STEEL or BRASS,
cadmium plated yellow passivation

-SHELLS: STEEL,
cadmium plated yellow passivation

ELECTRICAL CHARACTERISTICS

-NOMINAL CURRENT: 7.5A (SIGNAL CONTACT)

-CONTACT RESISTANCE: <=7.3 m Ohms SIGNAL

-CONTACT/CONTACT : >=1000 V

-CONTACT/GROUND : >=1200 V

-INSULATION RESISTANCE: >=5000 MOhms

- CLIMATIC CATEGORY: 55/125/21
TEMPERATURE RANGE -55°C TO +125°C
DAMP HEAT STEADY STATE 56 DAYS
SALT SPRAY 48 HOURS

DBML13W3P400N

Series

Shell size: **E A B C D**
see sheet 3

M :characteristic for the DM series

Front accessory definition
see sheet 2

Blank :without accessory
L :threaded insert M3
O :threaded insert UNC 4-40
V :female screw UNC 4-40
F :floating mounting
S :spacer

Layout of contacts (see sheet 3)

Contacts

P :Pin

Termination type

4 3 level wire wrap

Plating

00 straight solder 500 matings/unmatings
43 straight solder 500 matings/unmatings for harsh environment

N :obligatory indication for HE 507 series

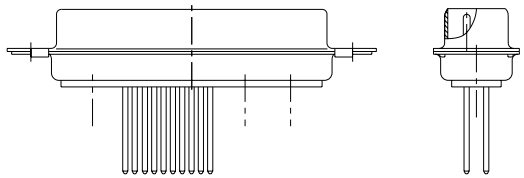

13W3 FOR EXAMPLE

rev	ecn no	dr	date
A	LS06-0174	MPE	2006/11/14
B	LS07-0273	MPE	2007/10/30
-	-	-	-
-	-	-	-
-	-	-	-
-	-	-	-
-	-	-	-

www.fciconnect.com

surface - ISO 1302 | tolerance std ISO 406 ISO 1101 | projection | mm

TOLERANCES UNLESS OTHERWISE SPECIFIED

Dr	M PESSON	2006/11/14	ANGULAR 0° ±2°	LINEAR	0.X	±0.3	size A2
Eng	P LEGARE	2006/11/14			0.XX	±0.1	Scale 2:1
Chr	P LEGARE	2006/11/14			0.XXX	±0.05	ECN LS07-0273
Appr	P LEGARE	2006/11/14	Product family -				Spec ref

title: SUB MALE DMW
mixed power 3 level wire wrap

dwg no: C01-8637-1756 Rev. B

catalog no -

CUSTOMER

sheet 1 of 7

Copyright FCI.

REV F - 2006-06-17

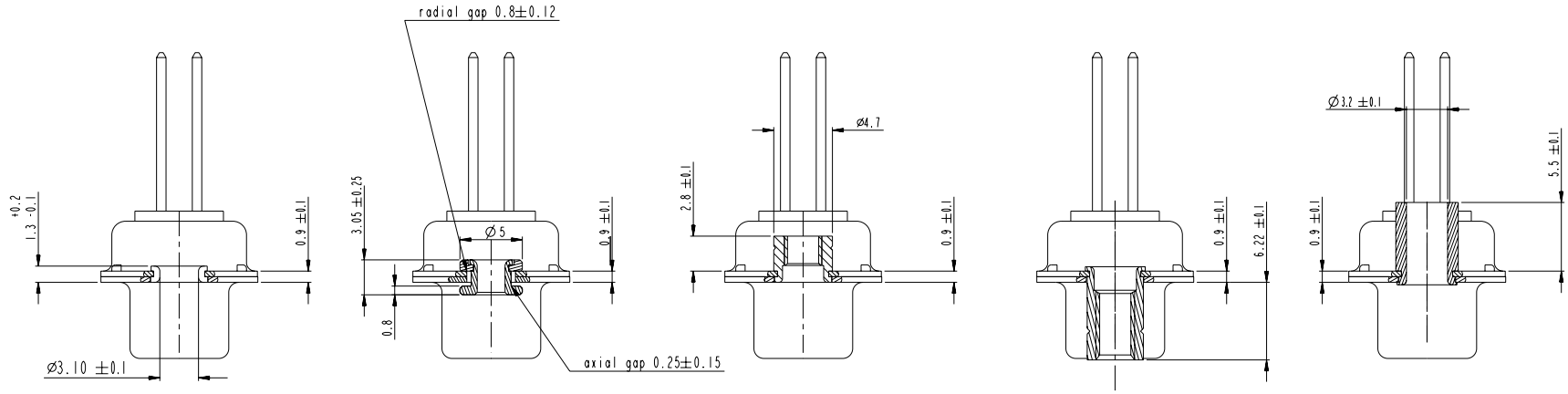

FRONT ACCESSORY				
Blank without	**F** floating mounting	**L** insert M3 **O** insert UNC 4.40	**V** femelle screw UNC 4.40	**S** Spacer

PART NUMBER	FRONT ACCESSORY
D*MxWxP400N	without
D*MFxWxP400N	floating mounting
D*MLxWxP400N	insert M3
D*MOxWxP400N	insert UNC 4.40
D*MVxWxP400N	female screw UNC 4.40
D*MSxWxP400N	Spacer
D*MxWxP443N	without
D*MFxWxP443N	floating mounting
D*MLxWxP443N	insert M3
D*MOxWxP443N	insert UNC 4.40
D*MVxWxP443N	female screw UNC 4.40
D*MSxWxP443N	Spacer

shell size	LAYOUTS
*	xWx
E	5W1
A	11W1
A	7W2
B	21W1
B	17W2
B	13W3
B	9W4
C	25W3
C	21WA4
C	27W2
D	47W1
D	24W7
D	36W4

SCALE:4

www.fciconnect.com			surface - ISO 1302		tolerance std ISO 406 ISO 1101		projection	mm
			TOLERANCES UNLESS OTHERWISE SPECIFIED					
Dr	M PESSON	2006/11/14	ANGULAR	LINEAR	0.X	±0.3	size A2	Scale 2:1
Eng	P LEGARE	2006/11/14			0.XX	±0.1		
Chr	P LEGARE	2006/11/14	0° ±2°		0.XXX	±0.05	ECN	LS07-0273
Appr	P LEGARE	2006/11/14	Product family			-	Spec ref	
title	SUB MALE DMW mixed power 3 level wire wrap						dwg no C01-8637-1756	Rev. B
catalog no						-	CUSTOMER	sheet 2 of 7

Copyright FCI.

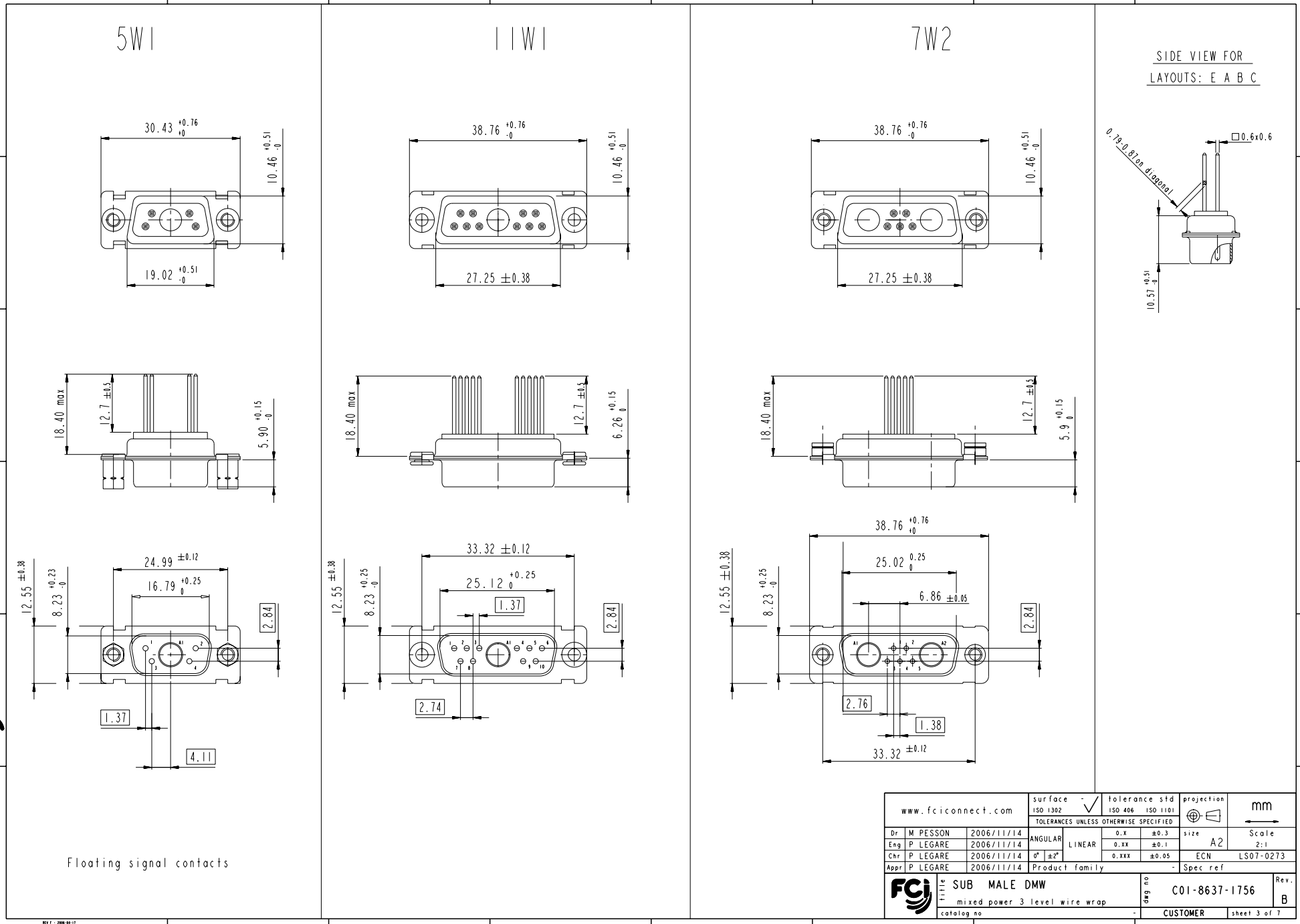
5W1
11W1
7W2
SIDE VIEW FOR LAYOUTS: E A B C
30.43 +0.76 +0
10.46 +0.51 -0
19.02 +0.51 -0
38.76 +0.76 -0
27.25 ±0.38
0.79-0.87 on diagonal
□0.6x0.6
10.57 +0.51 -0
18.40 max
12.7 ±0.5
5.90 +0.15 -0
6.26 +0.15 0
5.9 +0.15 0
24.99 ±0.12
16.79 +0.25 0
12.55 ±0.38
8.23 +0.23 -0
8.23 +0.25 -0
2.84
1.37
4.11
33.32 ±0.12
25.12 +0.25 0
2.74
38.76 +0.76 +0
25.02 0.25 0
6.86 ±0.05
2.76
1.38
33.32 ±0.12
Floating signal contacts
Copyright FCI.
www.fciconnect.com
surface ISO 1302
tolerance std ISO 406 ISO 1101
TOLERANCES UNLESS OTHERWISE SPECIFIED
projection
mm
Dr M PESSON 2006/11/14
Eng P LEGARE 2006/11/14
Chr P LEGARE 2006/11/14
Appr P LEGARE 2006/11/14
ANGULAR 0° ±2°
LINEAR 0.X ±0.3 0.XX ±0.1 0.XXX ±0.05
size A2
Scale 2:1
ECN LS07-0273
Product family -
Spec ref
title SUB MALE DMW
mixed power 3 level wire wrap
dwg no C01-8637-1756
Rev. B
catalog no -
CUSTOMER
sheet 3 of 7

13W3

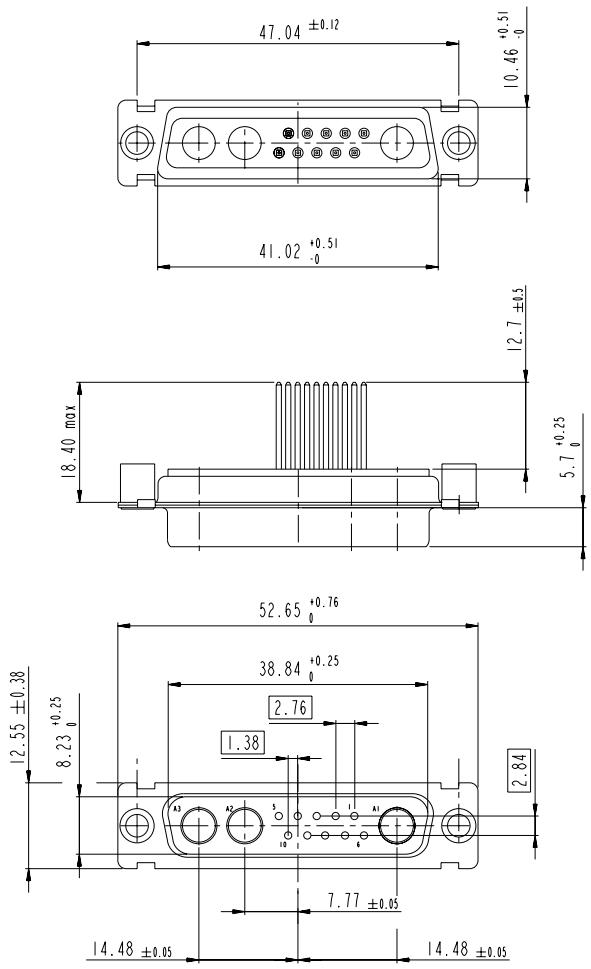

9W4

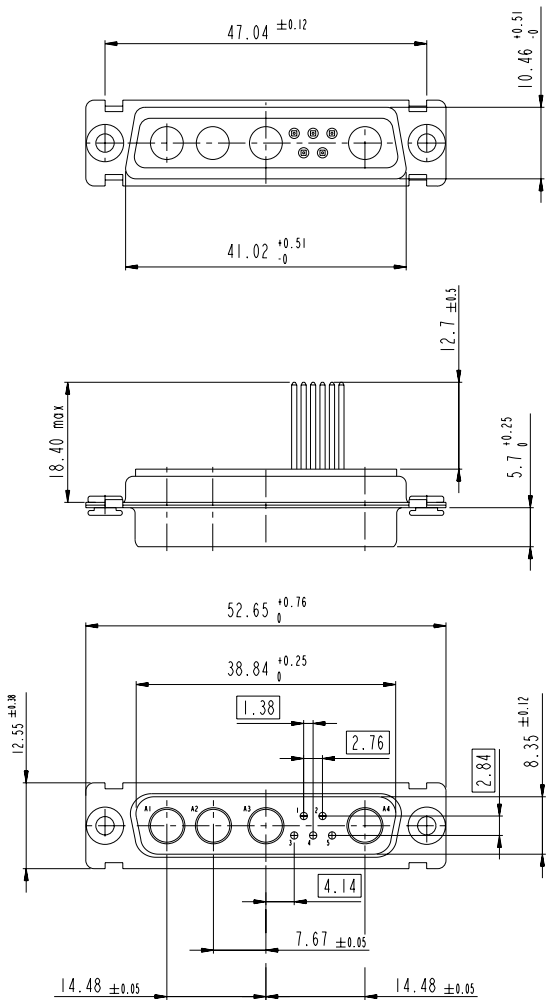

Floating signal contacts

17W2

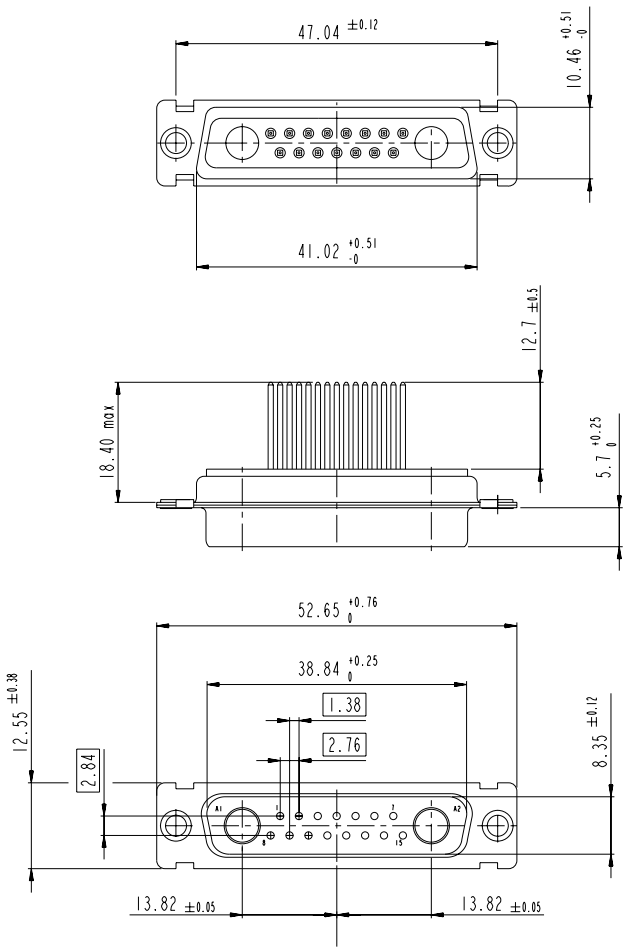

www.fciconnect.com			surface - ISO 1302		tolerance std ISO 406 ISO 1101		projection	mm
			TOLERANCES UNLESS OTHERWISE SPECIFIED					
Dr	M PESSON	2006/11/14	ANGULAR	LINEAR	0.X	±0.3	size A2	Scale 2:1
Eng	P LEGARE	2006/11/14			0.XX	±0.1		
Chr	P LEGARE	2006/11/14	0° ±2°		0.XXX	±0.05	ECN	LS07-0273
Appr	P LEGARE	2006/11/14	Product family			-	Spec ref	
title	SUB MALE DMW mixed power 3 level wire wrap						dwg no C01-8637-1756	Rev. B
catalog no							CUSTOMER	sheet 4 of 7

Copyright FCI.

PDM:Rev:B STATUS:Released Printed: Jun 18, 2015

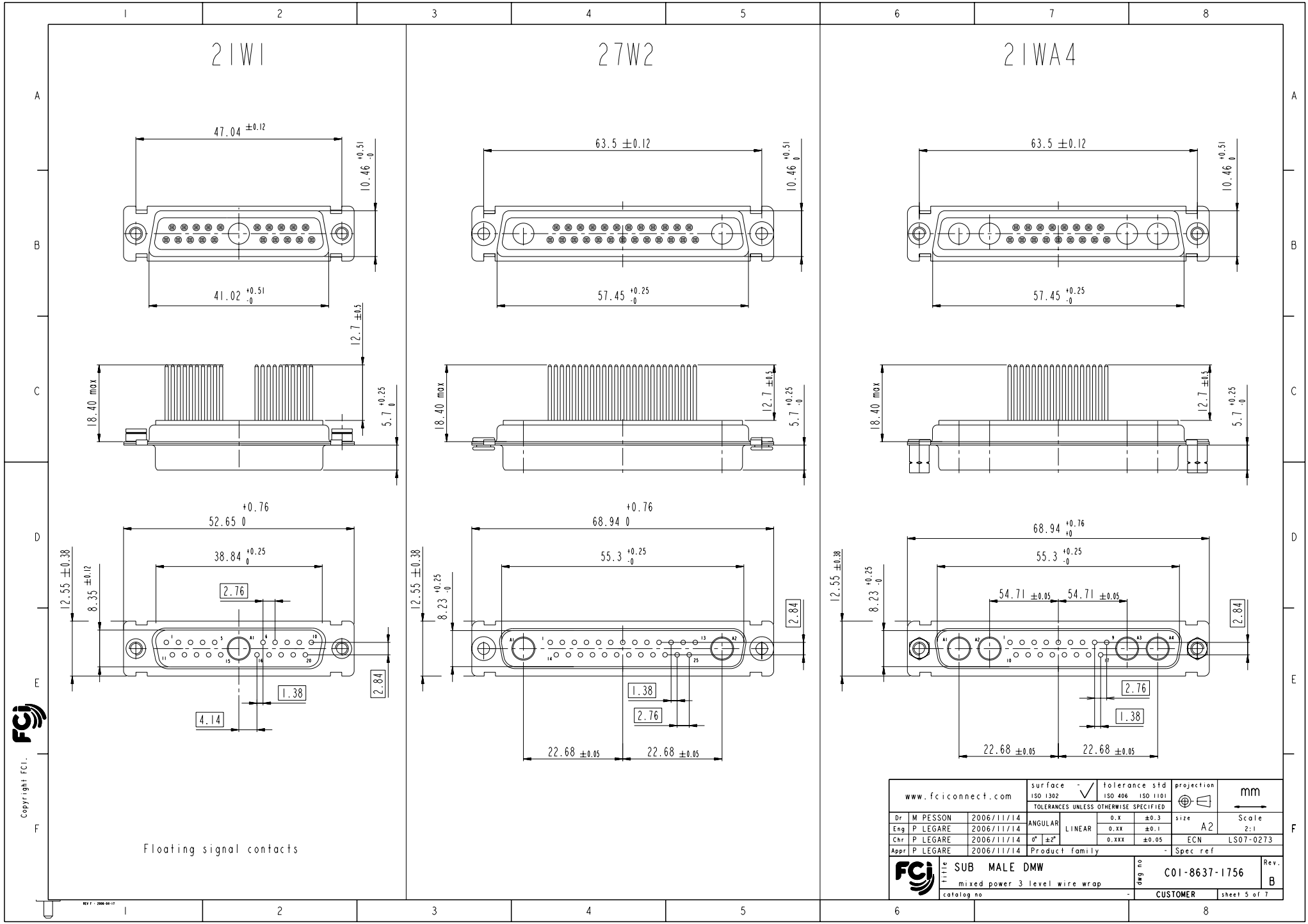
21W1
27W2
21WA4
47.04 ±0.12
10.46 +0.51 -0
41.02 +0.51 -0
12.7 ±0.5
18.40 max
5.7 +0.25 0
52.65 +0.76 0
38.84 +0.25 0
12.55 ±0.38
8.35 ±0.12
2.76
1.38
4.14
2.84
63.5 ±0.12
57.45 +0.25 -0
68.94 +0.76 0
55.3 +0.25 -0
8.23 +0.25 -0
22.68 ±0.05
68.94 +0.76 +0
54.71 ±0.05
Floating signal contacts
www.fciconnect.com
surface ISO 1302
tolerance std ISO 406 ISO 1101
projection
mm
TOLERANCES UNLESS OTHERWISE SPECIFIED
Dr M PESSON 2006/11/14
Eng P LEGARE 2006/11/14
Chr P LEGARE 2006/11/14
Appr P LEGARE 2006/11/14
ANGULAR 0° ±2°
LINEAR 0.X ±0.3 0.XX ±0.1 0.XXX ±0.05
size A2
Scale 2:1
ECN LS07-0273
Product family -
Spec ref
title SUB MALE DMW
mixed power 3 level wire wrap
dwg no C01-8637-1756
Rev. B
catalog no -
CUSTOMER
sheet 5 of 7
Copyright FCI.

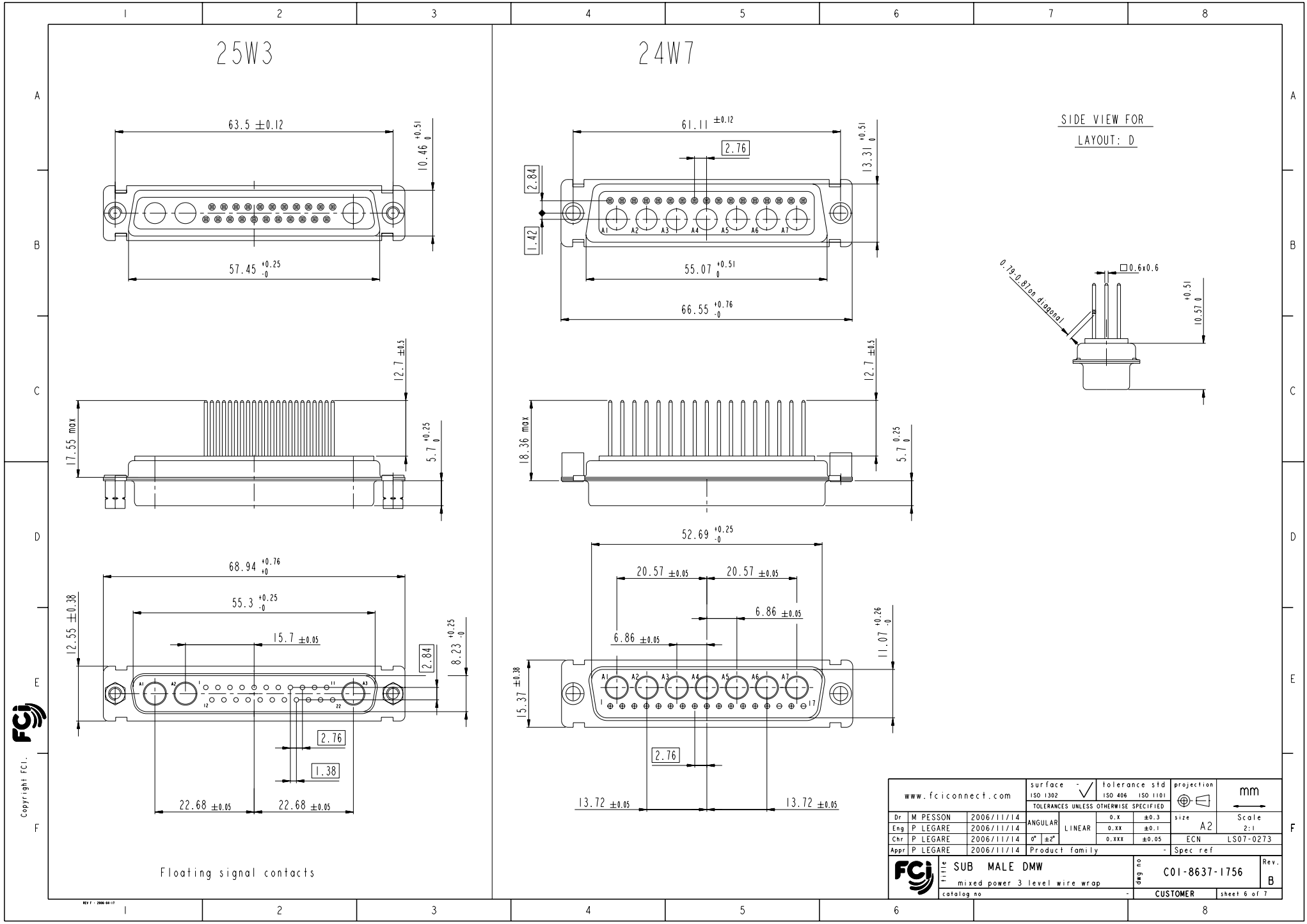
25W3
24W7
63.5 ±0.12
10.46 +0.51 0
57.45 +0.25 -0
12.7 ±0.5
17.55 max
5.7 +0.25 0
68.94 +0.76 +0
55.3 +0.25 -0
15.7 ±0.05
12.55 ±0.38
2.84
8.23 +0.25 -0
2.76
1.38
22.68 ±0.05
22.68 ±0.05
Floating signal contacts
61.11 ±0.12
2.76
2.84
1.42
13.31 +0.51 0
55.07 +0.51 0
66.55 +0.76 -0
12.7 ±0.5
18.36 max
5.7 0.25 0
52.69 +0.25 -0
20.57 ±0.05
20.57 ±0.05
6.86 ±0.05
6.86 ±0.05
11.07 +0.26 -0
15.37 ±0.38
2.76
13.72 ±0.05
13.72 ±0.05
SIDE VIEW FOR
LAYOUT: D
0.79-0.87 on diagonal
□0.6x0.6
10.57 +0.51 0
www.fciconnect.com
surface ISO 1302
tolerance std ISO 406 ISO 1101
projection
mm
TOLERANCES UNLESS OTHERWISE SPECIFIED
Dr M PESSON 2006/11/14
Eng P LEGARE 2006/11/14
Chr P LEGARE 2006/11/14
Appr P LEGARE 2006/11/14
ANGULAR 0° ±2°
LINEAR 0.X ±0.3 0.XX ±0.1 0.XXX ±0.05
size A2
Scale 2:1
ECN LS07-0273
Product family
Spec ref
title SUB MALE DMW
mixed power 3 level wire wrap
dwg no C01-8637-1756
Rev. B
catalog no
CUSTOMER
sheet 6 of 7
Copyright FCI.

36W4

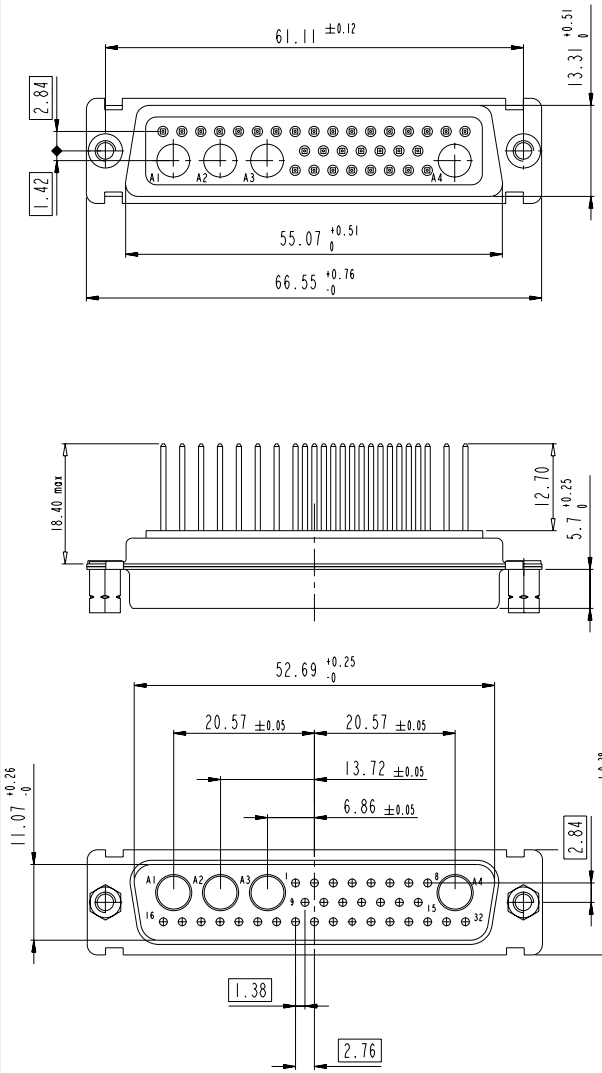

Floating signal contacts

47W1

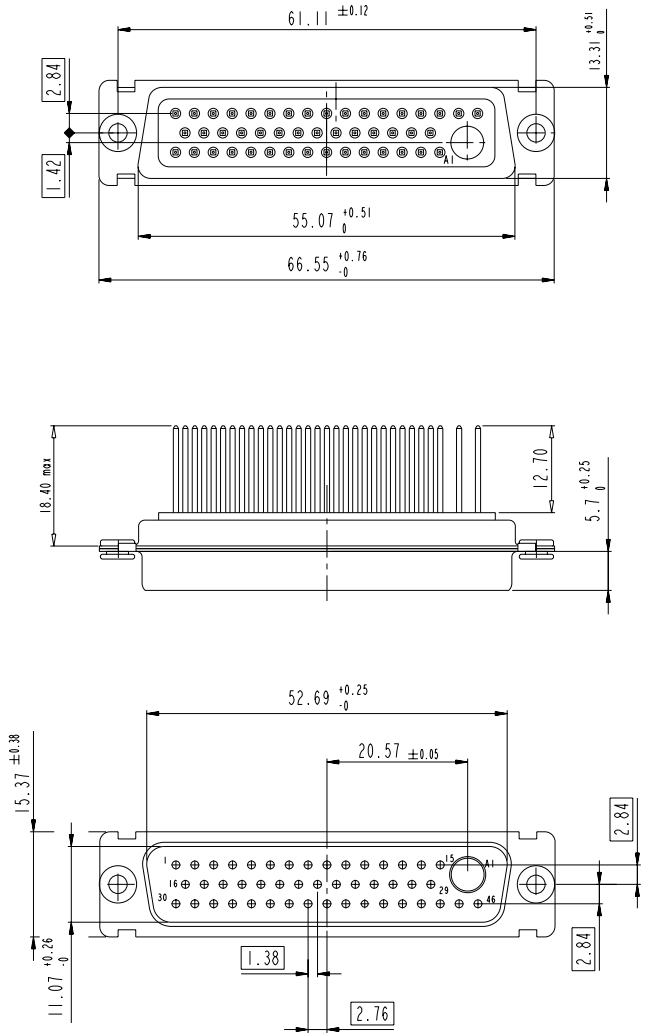

www.fciconnect.com			surface - ISO 1302		tolerance std ISO 406 ISO 1101		projection	mm
			TOLERANCES UNLESS OTHERWISE SPECIFIED					
Dr	M PESSON	2006/11/14	ANGULAR	LINEAR	0.X	±0.3	size A2	Scale 2:1
Eng	P LEGARE	2006/11/14			0.XX	±0.1		
Chr	P LEGARE	2006/11/14	0° ±2°		0.XXX	±0.05	ECN	LS07-0273
Appr	P LEGARE	2006/11/14	Product family -				Spec ref	
title	SUB MALE DMW mixed power 3 level wire wrap						dwg no C01-8637-1756	Rev. B
catalog no -							CUSTOMER	sheet 7 of 7

Copyright FCI.