THIS DRAWING IS UNPUBLISHED. RELEASED FOR PUBLICATION 2014
© COPYRIGHT 2014 BY TE CONNECTIVITY ALL RIGHTS RESERVED.

REVISIONS

P	LTR	DESCRIPTION	DATE	DWN	APVD
	A	NEW RELEASE PER ECO-14-013592	09-05-14	DM	DM

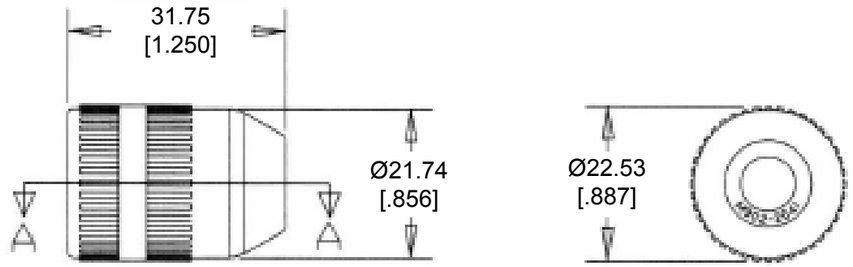

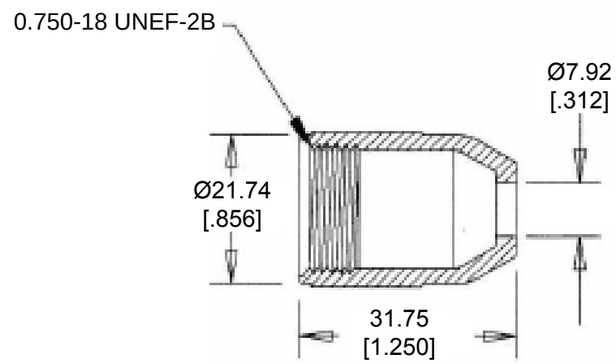

SECTION A-A

4. PART NO. M902-2041

3. CABLE SIZE: Ø.187 - Ø.300

2. TEMPERATURE RATING: -40°C TO +134°C [-40°F TO +273°F]

1. THIS PART IS USED WITH
   BACKSHELL, M902-2131 (HD10, SIZE 3)
   BACKSHELL, M902-2161 (HD10, SIZE 6)
   BACKSHELL, M902-2191 (HD10, SIZE 9)

THIS DRAWING IS A CONTROLLED DOCUMENT.

DIMENSIONS: MM [INCH]

TOLERANCES UNLESS OTHERWISE SPECIFIED:
0 PLC ±
1 PLC ±
2 PLC ± .63 [.025]
3 PLC ±
4 PLC ±
ANGLES ± 5°

MATERIAL: PC/PBT

FINISH: BLACK

DWN D. MEYER 05SEP2014
CHK I. GRANTCHAROVA 05SEP2014
APVD D. MEYER 05SEP2014
PRODUCT SPEC
APPLICATION SPEC
WEIGHT 6.34 g

Customer Drawing

TE Connectivity

NAME NUT, COMRESSION, SIZE 3,6,9
CABLE SIZE: Ø.187 - Ø.300
HD10 SERIES

SIZE	CAGE CODE	DRAWING NO	RESTRICTED TO
A3	4AFU8	C- M902-2041	-

SCALE NONE | SHEET 1 OF 1 | REV A

1470-19 (3/13)